Product Catalog

Automatic Identification Solutions

Fixed Position • Omni Directional

Vision • Hand Held • Laser Measurement

NORTH AMERICA

800.325.SICK

www.sickusa.com

SICK

SICK Auto Ident, Inc.
6900 West 110th Street
Minneapolis, MN 55438 USA
Tel: 952.941.6780
Fax: 952.941.9287
www.sickusa.com

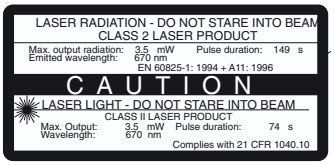

Welcome to SICK Auto Ident, Inc.

SICK was founded in Germany by Dr. Erwin Sick in 1946. Dr. Sick, a specialist in optics, applied his practical knowledge of electronics to the physics of light. As industry moved into the age of automation, it faced many challenges requiring new solutions and SICK began to provide these solutions. Since these beginnings over fifty years ago, SICK has continued to extend and test various optical principles across different systems to develop the most innovative photoelectric sensors, safety systems and automatic identification solutions in the industry. We currently hold over 350 patents and continue to reinvest heavily in research and development.

Recently, SICK, Inc. strengthened its position as a global leader in automatic identification solutions with the acquisitions of the LazerData division of PSC, Inc. and the Material Handling Division of RVSI Acuity CiMatrix. LazerData brings years of service, application, and research and development experience while the Material Handling Division of RVSI is one of the pre-eminent suppliers of advanced bar code reading systems. These systems maximize throughput and accurately track items in manufacturing, high-volume retail distribution, parcel sortation and airport baggage handling applications.

SICK continues to lead the industries it serves with new product innovations. The diversity of our product line, from photoelectric sensors and safety systems to automatic identification solutions, allows us to offer solutions at every phase of production and throughout the distribution supply chain. In each product line we strive to exceed current trends and standards. The strength of SICK lies in our history of developing "the best concept for the next ten years" (Erwin Sick).

Technological advances give SICK scanners a performance edge- even for the most complex applications. Our automatic identification solutions feature superior flexibility in a common technology platform that provides exceptional value. Plus, easy to use Windows™-based setup software allows our customers to configure scanners quickly and easily for maximum productivity.

SICK has established itself as the leading manufacturer and system partner for both large and small-scale projects in every branch of industry. As your industry moves into the future of automation, production and manufacturing you will find SICK is ready with a solution to your newest challenge.

TABLE OF CONTENTS

TABLE OF CONTENTS

FIXED POSITION SCANNERS

CLP 100

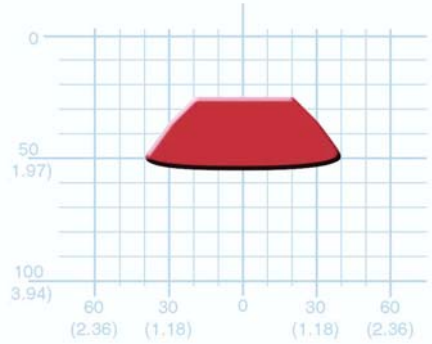

Technical Specifications

	CLP 100
Scanning Frequency	500 Hz (software selectable)
Scan Options	CCD line
Decoding Method	Standard
Housing/Enclosure	Front, side emitting
IP Rating	IP 40
Dimensions	2.2 x 0.8 x 1.9 in (55 x 20 x 47 mm)
Interfaces	RS 232
Focus Type	Fixed Focus

For more information on the CLP 100 refer to pages 16-21

CLV 410/412/414

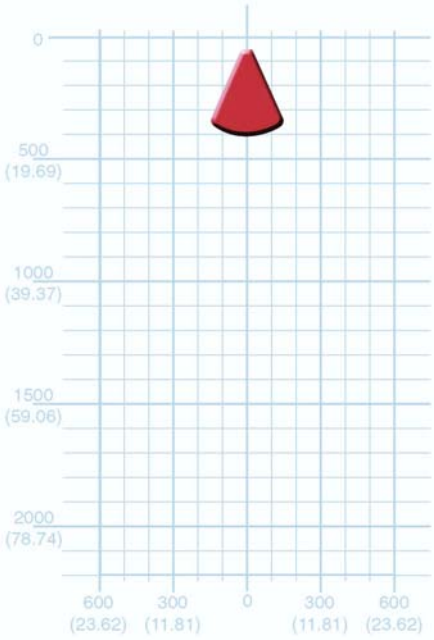

Technical Specifications

	CLV 410/412/414
Scanning Frequency	200…800 Hz (software selectable)
Scan Options	Line, raster
Decoding Method	Standard
Housing/Enclosure	Front, side emitting
IP Rating	IP 54
Dimensions	2.3 x 2.5 x 1.4 in (59 x 62.7 x 35.2 mm)
Interfaces	RS 232, RS 422/485
Focus Type	Fixed Focus

For more information on the CLV 410/412/414 refer to pages 22-27

CLV 420/421/422

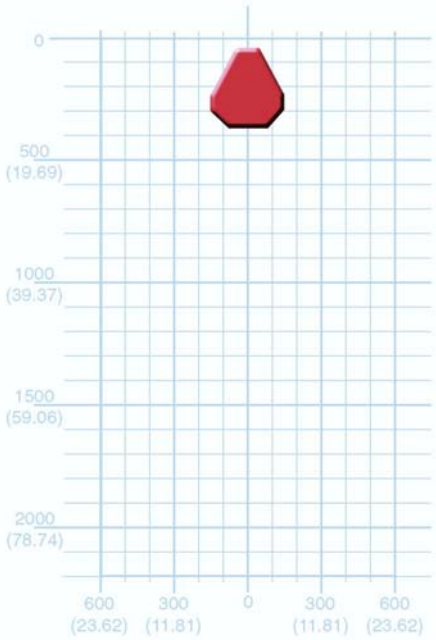

Technical Specifications

	CLV 420/421/422
Scanning Frequency	400…1200 Hz (software selectable)
Scan Options	Line, raster
Decoding Method	Standard
Housing/Enclosure	Front, side emitting
IP Rating	IP 65
Dimensions	2.3 x 2.5 x 1.4 in (59 x 62.7 x 35.2 mm)
Interfaces	RS 232, RS 422/485
Focus Type	Fixed Focus

For more information on the CLV 420/421/422 refer to pages 28-33

FIXED POSITION SCANNERS

CLV 430/431/432

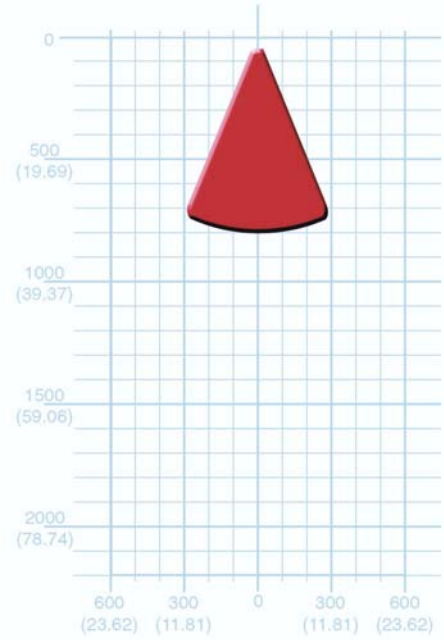

Technical Specifications

	CLV 430/431/432
Scanning Frequency	300…800 Hz (software selectable)
Scan Options	Line, raster, oscillating mirror
Decoding Method	Standard, SMART
Housing/Enclosure	Front, side emitting, oscillating mirror
IP Rating	IP 65
Dimensions	3.5 x 2.4 x 1.4 in (90 x 60 x 35.7 mm)
Interfaces	RS 232, RS 422/485
Focus Type	Fixed Focus

For more information on the CLV 430/431/432 refer to pages 34-39

CLV 440/442

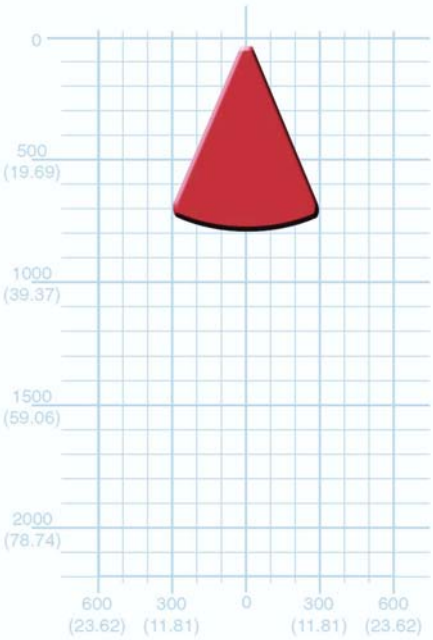

Technical Specifications

	CLV 440/442
Scanning Frequency	300…800 Hz (software selectable)
Scan Options	Line, oscillating mirror (440 only)
Decoding Method	Standard, SMART
Housing/Enclosure	Front emitting, oscillating mirror
IP Rating	IP 65
Dimensions	3.5 x 2.4 x 1.4 in (90 x 60 x 35.7 mm)
Interfaces	RS 232, RS 422/485
Focus Type	Dynamic Focus Control

For more information on the CLV 440/442 refer to pages 40-45

CiMAX® 7500A/7550A/7555A

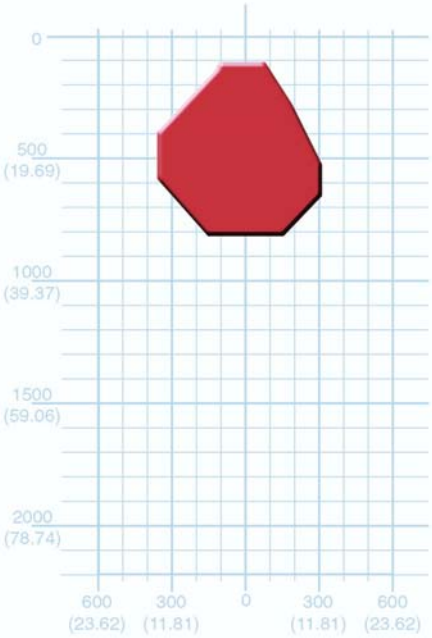

Technical Specifications

	CiMAX 7500A/7550A/7555A
Scanning Frequency	Up to 1800 Hz
Scan Options	Line, raster
Decoding Method	Standard, CIX
Housing/Enclosure	Front emitting, right angle
IP Rating	IP 65
Dimensions	4.5 x 4.3 x 5.8 in (114 x 109 x 146 mm)
Interfaces	RS 232, RS 422/485
Focus Type	Fixed Focus

For more information on the CiMAX 7500A/7550A/7555A refer to pages 46-51

FIXED POSITION SCANNERS

CLV 450

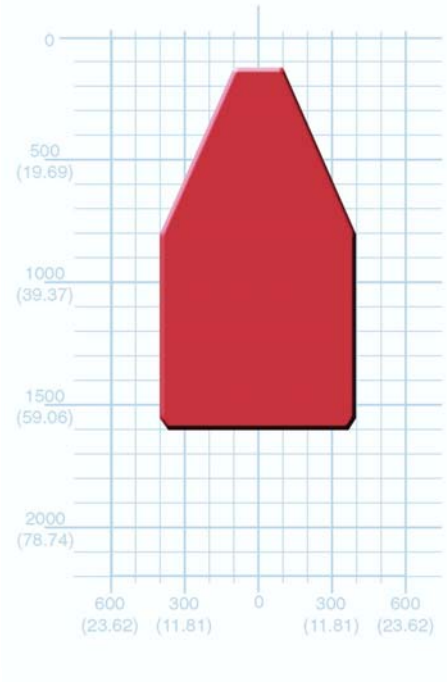

Technical Specifications

	CLV 450
Scanning Frequency	400…1000 Hz (software selectable)
Scan Options	Line, oscillating mirror
Decoding Method	Standard, SMART
Housing/Enclosure	Front emitting, oscillating mirror
IP Rating	IP 65
Dimensions	3.5 x 2.4 x 1.4 in (90 x 60 x 35.7 mm)
Interfaces	RS 232, RS 422/485
Focus Type	Dynamic Focus Control

For more information on the CLV 450 refer to pages 52-57

CLV 490

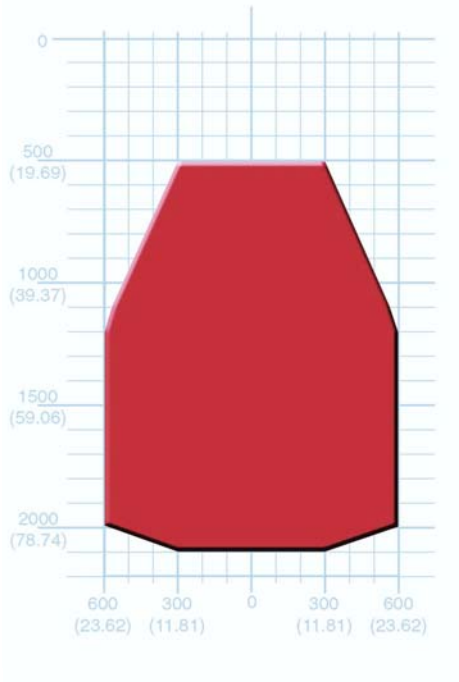

Technical Specifications

	CLV 490
Scanning Frequency	600…1200 Hz (software selectable)
Scan Options	Line, oscillating mirror
Decoding Method	Standard, SMART
Housing/Enclosure	Front emitting, oscillating mirror
IP Rating	IP 65
Dimensions	4.6 x 4.6 x 3.7 in (117 x 117 x 94 mm)
Interfaces	RS 232, RS 422/485
Focus Type	Auto Focus Control

For more information on the CLV 490 refer to pages 58-63

Fixed Position Scanners

Our fixed position scanners feature superior flexibility, which allows our customers to configure the scanners with common platform, off-the-shelf technology for fast implementation and increased productivity. They have a high degree of simplicity because we offer Windows™-based setup software, so our customers can get their new bar code scanner into action quickly and easily. Technological advances give SICK fixed position scanners a performance edge- even for the most complex applications.

Fixed Position Applications:

- Component identification
- Patient sample tracking
- Circuit board tracking
- Product label verification
- Package identification
- Package tracking
- Small conveyor applications
- High speed pharmaceutical label rewind lines
- Print and apply applications
- Automotive assembly
- Circuit board identification
- Conveyor sorting systems
- Pallet identification
- Vehicle sequencing
- Error-proofing

OMNI DIRECTIONAL SYSTEMS

CLX 490

Features

- Compact omni directional bar code scanner
- Smallest unit of its class
- Auto Focus Control
- SMART technology
- Integrated tracking function
- Extremely large depth of field
- High speed (1200 Hz)
- Parameters stored in plug and quick-release brackets allow easy scanner replacements

Technical Specifications

	CLX 490
Scanning Frequency	600…1200 Hz (software selectable)
Conveyor	
• **Width**	15.7 in (400 mm)
• **Height**	31.5 in (800 mm)
• **Speed**	Up to 590 ft/min (180 m/min)
Dimensions	6.0 x 3.6 x 8.0 in (152.6 x 93.5 x 208 mm)
Interfaces	RS 232, RS 422/485
Focus Type	Auto Focus Control

*For more information on the **CLX 490** refer to pages **68-73***

OPS 400

Features

- Compact integrated housing
- Plug and play (common CLV setup platform)
- High scan rate (up to 1200 Hz)
- Real time Auto Focus Control
- Available in standard, high- and low-density models
- SMART code recognition
- Integrated tracking

Technical Specifications

	OPS 400
Scanning Frequency	600…1200 Hz (software selectable)
Conveyor	
• **Width**	31.5 in (800 mm)
• **Height**	31.5 in (800 mm)
• **Speed**	Up to 590 ft/min (180 m/min)
Dimensions	20.9 x 10.6 x 6.2 in (530 x 270 x 158 mm)
Interfaces	RS 232, RS 422/484
Focus Type	Auto Focus Control

*For more information on the **OPS 400** refer to pages **74-75***

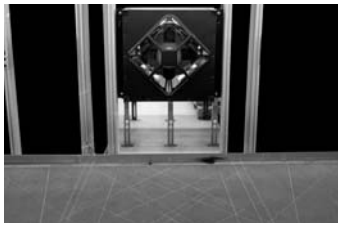

OMNI-L Slim X

Features

- Single polygon configured for one or two "x" patterns depending on application requirements
- High scan rate (525 Hz)
- Advanced diagnostics with real time monitoring of label quality, scanner and network operation
- "C" programmable local I/O and communications
- CIX reconstruction technology
- Side-by-side tilt tray capability
- Dynamic depth of field

Technical Specifications

	OMNI-L Slim X
Scanning Frequency	525 Hz
Conveyor	
• **Width**	Up to 30 in (762 mm)
• **Height**	Up to 10 in (254 mm)
• **Speed**	120 ft/min (37 m/min)
Dimensions	23.0 x 20.5 x 8.8 in (858 x 521 x 224 mm)
Interfaces	RS 232, RS 422
Focus Type	Fixed Focus

*For more information on the **OMNI-L Slim X** refer to pages **76-77***

OMNI DIRECTIONAL SYSTEMS

OMNI-2110

Features

- Single polygon configured for one or two "x" patterns depending on application requirements
- High scan rate (up to 550 Hz)
- Advanced diagnostics with real time monitoring of label quality, scanner and network operation
- "C" programmable local I/O and communications
- CIX reconstruction technology
- Side-by-side tilt tray capability
- Dynamic depth of field

Technical Specifications

	OMNI-2110
Scanning Frequency	550 Hz
Conveyor	
• **Width**	Up to 40 in (1016 mm)
• **Height**	Up to 36 in (914 mm)
• **Speed**	600 ft/min (183 m/min)
Dimensions	24.0 x 18.5 x 9.0 in (610 x 470 x 229 mm)
Interfaces	RS 232, RS 422
Focus Type	Fixed Focus

*For more information on the **OMNI-2110** refer to pages **78-79***

OPS 290

Features

- Modular concept allows individual adaptation to your application
- Use of CLV 490 high-end scanners
- Real time Auto Focus Control function without additional components
- Parameters stored in plug and quick-release brackets allow easy scanner replacements
- Extremely large depth of field

Technical Specifications

	OPS 290
Scanning Frequency	600…1200 Hz (software selectable)
Conveyor	
• **Width**	31.5 in (800 mm)
• **Height**	31.5 in (800 mm)
• **Speed**	Up to 590 ft/min (180 m/min)
Dimensions	CLV 490: 4.6 x 4.6 x 3.7 in (117 x 117 x 94 mm)
Interfaces	RS 232, RS 422
Focus Type	Auto Focus Control

*For more information on the **OPS 290** refer to pages **80-81***

OPS 490

Features

- Modular concept allows individual adaptation to your application
- Use of CLV 490 high-end scanners
- Real time Auto Focus Control function without additional components
- Parameters stored in plug and quick-release brackets allow easy scanner replacements
- Extremely large depth of field

Technical Specifications

	OPS 490
Scanning Frequency	600…1200 Hz (software selectable)
Conveyor	
• **Width**	59.1 in (1500 mm)
• **Height**	31.5 in (800 mm)
• **Speed**	Up to 590 ft/min (180 m/min)
Dimensions	CLV 490: 4.6 x 4.6 x 3.7 in (117 x 117 x 94 mm)
Interfaces	RS 232, RS 422
Focus Type	Auto Focus Control

*For more information on the **OPS 490** refer to pages **82-83***

TUNNEL SCANNING SYSTEMS

Advanced OPS & Tunnel Scanning Systems

Features

- Modular design configuration to maximize coverage requirements
- Rugged, high performance CLV 490 scanners
- Maximum performance OMNI-2110 scanner
- Real time and Dynamic Focus Control for faster throughput
- Powerful OTS tracking system
- Flexible communication capabilities for host, network and controls systems
- High scan frequency for speeds up to 590 ft/min
- Remote diagnostics tools to monitor system performance
- SMART label recognition and reconstruction software for difficult to read labels
- Optional dimensioning and volume system
- Cloning module to store configuration parameters for quick replacement
- Easy to use setup and configuration tools

For more information on Advanced OPS/Tunnel Scanning Systems refer to pages 84-85

ALIS - Airport Luggage Identification System

Features

- Extremely high reading rates
- Parameters stored in the connector for quick replacement of scanners
- For T-codes as well as linear codes
- Auto Focus Control for large depth of field
- Suitable for belt conveyors and tray sorters
- Integrated decoder with real-time decoding and patented SMART code detection
- Optional RDT 400 diagnostics software

Technical Specifications

	ALIS
Scanning Frequency	600…1200 Hz
Conveyor	
• Width	31.5 in (800 mm)
• Height	31.5 in (800 mm)
• Speed	Up to 590 ft/min (180 m/min)
Dimensions	CLV 490: 4.6 x 4.6 x 3.7 in (117 x 117 x 94 mm)
Interfaces	RS 232, RS 422
Focus Type	Auto Focus Control

For more information on the ALIS refer to pages 86-87

VMS - Volume Measurement System

Features

- Contact-free measurement using LMS 200
- Standard software solution based on industrial PCs
- Determination of volumes for objects measuring up to 118 x 118 x 275 in^3
- Accuracies of up to ±10 mm (0.4 in)
- Measured values provided:
  -length, width, height
  -boxed volume
  -actual volume

Technical Specifications

	VMS
Object Shape	VMS 100: Rectangular VMS 200: Nearly any shape
Min. Object Size	VMS 100: min. 8 x 8 x 4 in^3 VMS 200: min. 4 x 4 x 4 in^3
Conveyor Speed	Up to 400 ft/min (122 m/min), constant or variable
Output Data	VMS 100 & 200: L x W x H, bar code data on connection of a bar code scanner VMS 200: Box & real volumes, angle of rotation, index

For more information on the VMS refer to pages 88-89

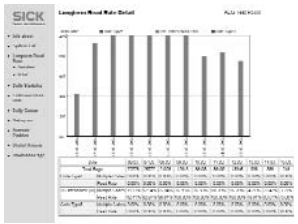

RDT 400 - Remote Diagnostic Tool

Features

- Supports ALIS and all OPS systems
- Connection of up to 64 scanner systems to the central RDT 400 server via Ethernet
- Supports scanner systems consisting of up to 24 individual scanners
- Remote monitoring and download of log files via Internet/Intranet
- Monitoring of system performance

RDT 400 (Remote Diagnostic Tool) is a powerful graphic visualization tool for monitoring and controlling any of SICK's OPS tunnels and ALIS systems. It allows you to check individual scanner and system performance from anywhere in the world via your company network, Intranet, or other remote communication access and RDT server connection enabling you to stay on top of system performance and catch trouble before it begins. Simple Windows™-based user interfaces provide details graphically about the performance characteristics of all scanners including read items, multi-read histograms and read rate performance by the hour, day or even annually. You can also program alarm thresholds to monitor read rates and alert you when system performance falls to an unacceptable level.

For more information on the RDT 400 refer to pages 90-91

MACHINE VISION SYSTEMS

ICR 850

Features

- Reads fast-moving and low contrast 2D codes
- Also reads all common linear bar codes using SMART code reconstruction
- High scanning frequency: 15,000 Hz
- Reading distance up to 4 in
- Reading field height up to 3.3 in

Technical Specifications

	ICR 850
Scanning Frequency	Up to 15 kHz
Scan Options	CCD line
Decoding Method	Standard SMART
Housing/Enclosure	Front, side emitting
IP Rating	IP 65
Dimensions	2.2 x 0.8 x 1.9 in (55 x 20 x 47 mm)
Interfaces	RS 232/422/485, Ethernet
Focus Type	Fixed Focus

For more information on the ICR 850 refer to pages 94-97

MHV-1000

Features

- Omni directional bar code/area code reader
- Area array camera produces high read rates
- High resolution decodes symbologies as low as 0.10 in
- 1D and 2D capabilities
- High performance light (optional)
- Laser centering
- Built-in decoder and imager all-in-one

Technical Specifications

	MHV-1000
Code Types Read	Code 39, I 2/5, Codabar, EAN, UPC, Code 128, Postnet, Data Matrix, Maxicode, PDF 417, QR Code
Maximum Conveyor Speed	Up to 150 ft/min (46 m/min) (dependent upon application)
Interfaces	RS 232
CCD Specs	CCD area camera, 1280 x 1026 pixels

For more information on the MHV-1000 refer to pages 98-99

MHV-2020

Features

- High resolution omni directional imaging scanner
- 7500 pixel high speed linear CCD imager enables reading of small code sizes
- 1D and 2D capabilities
- Integrated high performance lighting
- Completely sealed optics

Technical Specifications

	MHV-2020
Code Types Read	Code 39, I 2/5, Codabar, EAN, UPC, Code 128, Postnet, Data Matrix, Maxicode, PDF 417, QR Code
Maximum Conveyor Speed	600 ft/min for 0.015 in bar 500 ft/min for 0.013 in bar
Interfaces	RS 232, Ethernet T base 10/100
CCD Specs	CCD line scan camera, 7500 pixels

For more information on the MHV-2020 refer to pages 100-101

HAND HELD SCANNERS

IT 3800

Features

- Long range linear imager scanning for industrial or warehouse use
- Marker beam aids in aiming and finding the bar code from a distance
- Scanboot protects the scanner from drops and adds durability
- Dual interfaces switch between applications with a simple cable change
- Scanner's memory is field upgradable due to flash memory

Technical Specifications

	IT 3800
Scanning Type	Linear imager
Reading Distance*	1…8 in (25…203 mm)
Scan Rate	Up to 270 Hz
Interfaces	Keyboard wedge for PCs and Terminals, keyboard emulation, wand emulation, TTL level RS 232, Laser Out signal

*bar code dependent

For more information on the IT 3800 refer to page 104

ST 5750

Features

- Durable product that survives in harsh industrial applications
- Meets IP 54 requirements
- Hands-free scanning option for faster throughput
- Dual interfaces switch between applications with a simple cable switch
- Scanner's memory is field upgradable due to flash memory

Technical Specifications

	ST 5750
Scanning Type	Laser scanner
Reading Distance*	0…35 in (0…889 mm)
Scan Rate	36 Hz
Interfaces	Keyboard wedge for PCs and Terminals, keyboard emulation, TTL level RS 232

*bar code dependent

For more information on the ST 5750 refer to page 105

IT 4410/4710

Features

- Supports all popular matrix and stacked linear symbologies
- Omni directional scanning via technology and image processing
- Fixed position reader opens up new 2D bar code and image capture possibilities
- Bright, intuitive aiming line
- Autodiscriminates between supported symbologies (linear and matrix codes) and fonts (OCR)

Technical Specifications

	IT 4410/4710
Scanning Type	2D linear imager
Reading Distance*	1.9…9.4 in (48…239 mm)
Interfaces	Keyboard wedge for PCs and Terminals, HHLC (Code 128 emulation), TTL level RS 232

*bar code dependent

For more information on the IT 4410/4710 refer to page 106

IT 3870/ST 5770

Features

- Multiple scanner support
- Cordless scanner/base eliminates cables
- Broad range coverage increases mobility and productivity
- State-of-the-art radio technology
- Rugged design

Technical Specifications

	IT 3870/ST 5770
Scanning Type	3870: Cordless linear imager 5770: Cordless laser scanner
Reading Distance*	3870: 1…18 in (25…457 mm) 5770: 0…24 in (0…610 mm)
Scan Rate	3870: 270 Hz 5770: 36 Hz
Interfaces	Keyboard wedge for PCs and Terminals, wand emulation, RS 232

*bar code dependent

For more information on the IT 3870/ST 5770 refer to page 107

LASER MEASUREMENT SYSTEMS

LMS 200/291

Features

- 180° coverage
- Indoor applications
- Long range- up to 262 ft (80 m)
- Contact-free measurement
- Target objects require no reflectors or markings
- High scanning frequency (75 Hz)
- Transfer of data in real time
- Active system, no illumination of objects necessary

Technical Specifications

	LMS 200/291
Max. Scanning Angle	180°
Resolution / Typ. Meas. Accuracy	200: ±0.8 in / 3…26 ft 291: ±1.4 in / 13…65 ft
Range with 10% Reflectivity	200: 32.8 ft (10 m) 291: 98.4 ft (30 m)
Heating	200: no; 291: no
Fog Correction	200: no; 291: yes

For more information on the LMS 200/291 refer to pages 110-113

LMS 211

Features

- 100° coverage
- Outdoor applications
- Integrated heating and fog correction
- Contact-free measurement
- Target objects require no reflectors or markings
- Integrated lens shutter
- IP 67 rating
- Active system, no illumination of objects necessary

Technical Specifications

	LMS 211
Max. Scanning Angle	100°
Resolution / Typ. Meas. Accuracy	±1.4 in / 13…65 ft (±35 mm / 4…20 m)
Range with 10% Reflectivity	98.4 ft (30 m)
Heating	yes
Fog Correction	yes

For more information on the LMS 211 refer to pages 114-117

LMS 220/221

Features

- 180° coverage
- Outdoor applications
- Integrated heating and fog correction (LMS 221)
- Contact-free measurement
- Target objects require no reflectors or markings
- High scanning frequency (75 Hz)
- IP 67 rating
- Active system, no illumination of objects necessary

Technical Specifications

	LMS 220/221
Max. Scanning Angle	180°
Resolution / Typ. Meas. Accuracy	220: ±0.8 in / 3…26 ft 221: ±1.4 in / 13…65 ft
Range with 10% Reflectivity	220: 32.8 ft (10 m) 221: 98.4 ft (30 m)
Heating	220: yes; 221: yes
Fog Correction	220: no; 221: yes

For more information on the LMS 220/221 refer to pages 118-121

Technology, Support, Experience

SICK Auto Ident, Inc. is quickly becoming the world's premier supplier of automatic identification solutions. For over fifteen years we have developed high performance bar code scanners for the most demanding application requirements in the industry. Our products have been recognized worldwide for their innovative design, application flexibility and simplicity of operation, second to none. Now, as a result of strategic growth initiatives, we have significantly enhanced not only our product portfolio, but also securely positioned ourselves as a leading provider of service and application support. Through an unmatched combination of technological know-how, a world-class customer support network and the broadest base of application experience in the industry, we are poised to set the new standard of excellence in automatic identification solutions and service.

Technology

SICK Auto Ident products are designed using the latest available technologies and cost-effective manufacturing methods for exceptional customer value. We recognize that each application requires absolute dependability and the products we sell must fit into a wide range of scanning environments. That's why we design our products using state-of-the-art hardware platforms, the best available optical designs and the latest in communications capabilities. The result is products that are more compact than the industry average, easier to install and maintain, and packed with the latest technological advances for maximum ongoing performance and reliability. From laser-based scanning and dimensioning systems to the latest camera based solutions, SICK Auto Ident leads the industry in new technology and innovation.

Support

Without the proper level of customer and technical support, even the best technologies in the world will not provide complete customer satisfaction. SICK Auto Ident has established a nationwide network of sales, service and application support specialists that will assist with the most challenging application requirements. Our sales and applications engineers are on the front line with you to make sure that the proper solution is recommended for your specific application. We work with you through each detail at the beginning of every project to ensure the best possible product fit, and after the sale we continue to support you with lightning-fast service to keep your operation running optimally and with minimal downtime. There is also a wide variety of training and orientation methods available including on-site, on-line and at our facility, plus 24/7 phone support and technical assistance. When you can't afford to have your operation down for a moment, depend on SICK Auto Ident for the best available service and support in the industry.

Experience

The foundation of SICK Auto Ident's strong support network and innovative technology base is experience. We offer over 50 years of combined application experience with personnel coming from every aspect of the industry. From product design to application support to practical field experience, we have a superior team of professionals that have seen your application before and can help you get the best performance from our solutions. We have experience in the most diverse range of applications around the world and can ensure success in your next project or unique application requirement. When you need total confidence in your data collection partner, look no further than the experienced professionals at SICK Auto Ident, Inc.

INTRODUCTION

SICK Auto Ident, Inc. has developed innovative, high performance fixed position bar code scanners for over fifteen years to meet the demanding requirements of the automatic identification and data capture industry. The most critical element of a bar code scanner is the optics design. This is where it all begins in a bar code scanning application and this is also SICK's area of expertise. Over 50 years of experience integrating electronics with optics across several different product platforms shows in SICK's high performance bar code scanners. Our scanners feature rugged housings for years of accurate service in industrial environments.

In addition to high performance, we also build a high level of flexibility into our scanners. This allows our customers to configure the bar code scanners to meet their application requirements using common platform, off-the-shelf technology. This ability also increases productivity because SICK bar code scanners can be optimized on the spot.

In an effort to make sure our customers can implement our systems without requiring extensive training, we blend in a touch of simplicity. Our bar code scanners are accompanied by simple-to-use Windows™-based setup software. This software eliminates frustration with complicated programming and lets you get the scanner into action quickly and easily.

Our patented SMART technology, a "code recognition" algorithm, allows our scanners to decode only small segments of a bar code label. This provides much improved read rates when the bar code labels are at very high tilt angles and/or partially destroyed. Our unique Dynamic Focus Control and patented Auto Focus Control technologies provide large depth of field even with high-density bar code labels.

SICK's new generation and broad line of compact, fixed position scanners provide solutions for many different market segments such as electronic assembly, medical instrumentation, material handling, automotive packaging, print and apply, and pharmaceutical product label verification. SICK provides the most accurate read rates in the industry and that is the bottom line in any bar code system application.

CLP 100
Pgs. 16-21

The CLP 100 can identify bar codes at short reading distances in a limited amount of space. It has a fast response time thanks to a high scanning frequency of 500 Hz. The optimized focus distance is 1.38 in (35 mm) and side or end scanning models are available. It is also priced to fit into a limited budget. It is supported by Windows™-based setup software or by the use of the Host Command language which is fast and user friendly.

CLP 100 Applications:

- Component identification
- Patient sample tracking
- Circuit board tracking

CLV 410/412/414
Pgs. 22-27

The high performance scan rate, automatic triggering, real time decoding, broad reading range and integrated scanner and decoder make the CLV 410, CLV 412 and CLV 414 models an excellent solution in applications where compact size and high performance are needed. This family also has profile programming and a teach mode for new match codes.

CLV 410/412/414 Applications:

- Product label verification
- Circuit board tracking
- Patient sample tracking
- Part identification
- Package tracking
- Small conveyor applications

FIXED POSITION SCANNERS

CLV 420/421/422
Pgs. 28-33

The CLV 420/421/422 scanners fit in the palm of your hand and at 400 to 1200 Hz they are the most powerful bar code scanners of their size. This series has a scanning range of 2 to 29 inches. The rugged die cast zinc housing, precision optics and powerful electronics create a highly reliable system for industrial applications.

CLV 420/421/422 Applications:

- Material handling
- Document handling
- Packaging applications
- Electronics applications

CLV 430/431/432
Pgs. 34-39

The CLV 430, CLV 431 and CLV 432 models feature SMART technology to read damaged or partially hidden bar codes. They have a fixed focus type, integrated CAN Bus networking and a teach mode for new match codes.

CLV 430/431/432 Applications:

- Package tracking
- Package identification
- Automotive assembly
- Circuit board identification

CLV 440/442
Pgs. 40-45

The CLV 440 and CLV 442 have Dynamic Focus Control, which allows a large depth of field by dynamically adjusting its focus position to the object distance making it ideal for decoding bar codes on objects of different heights. This family also features integrated CAN Bus networking and SMART technology to read damaged or partially hidden bar codes. The CLV 442 is designed with special optics to read high density bar codes.

CLV 440/442 Applications:

- Circuit board tracking
- Part identification
- Automotive assembly
- Product label verification

CiMAX® 7500A/7550A/7555A
Pgs. 46-51

The CiMAX 7500A series is an integrated scanner and decoder with a maximum scan rate of up to 1800 Hz, preset focal lengths of 4 to 36 inches with a full 36 inch depth of field in a reading range of 2 to 38 inches. For maximum application flexibility an on-board processor allows local programmability and control.

CiMAX 7500A/7550A/7555A Applications:

- High speed sortation
- Automated distribution
- Quality control systems
- Intelligent conveyors

CLV 450
Pgs. 52-57

The CLV 450 has all the features and high performance you need in the smallest housing for scanners in its class on the market. It has a long scanning distance, Dynamic Focus Control and SMART technology. This is an excellent choice for demanding applications that require reading bar codes produced by ink jet printers, on corrugated surfaces and through shrink wrap.

CLV 450 Applications:

- Package identification
- Package tracking
- Product label verification

CLV 490
Pgs. 58-63

The CLV 490 features selectable standard or SMART decoding, Auto Focusing, a high scan rate and a long reading range. It is the most advanced, powerful and smallest scanner of its kind on the market. The CLV 490 features SMART technology for high tilt angles and reading bar codes that are damaged or partially hidden from the scanner's view. All parameters are software selectable and it also features automatic scanner setup via the cloning module.

CLV 490 Applications:

- Vehicle sequencing
- Error-proofing

CLP 100

FEATURES

- All parameters user selectable
- CCD integrated scanner and decoder
- Economical scanning solution
- High speed (500 Hz)
- Side emitting or front emitting
- Super compact size
- Windows™-based setup software

Model	Optics Type	Reading Range	Bar Code Resolution	Scan Frequency
CLP 100	Standard	1.0…2.2 in (25…55 mm)	0.005…0.040 in (0.125…1.0 mm)	500 Hz

Scan Options*	Focus Type	Decoding Method**	Housing/Enclosure*
✓ CCD Line	✓ Fixed Focus	✓ Standard	✓ Front Emitting
Raster	Focus Control	PCX	✓ Side Emitting
Oscillating Mirror	Dynamic Focus Control	SMART	Oscillating Mirror
*ordered separately		**user selectable	*ordered separately

READING RANGES *Dimensions in inches (mm)*

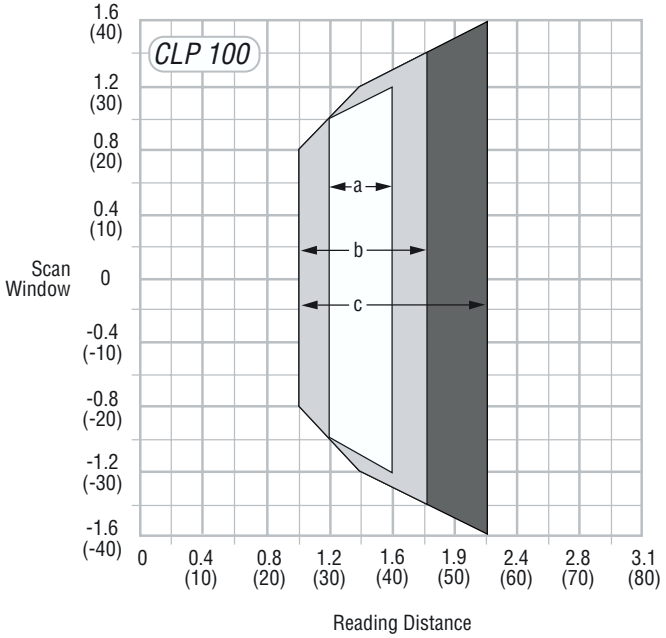

Code Resolution

- a: 0.006 in (0.15 mm)
- b: 0.008 in (0.20 mm), 0.010 in (0.25 mm)
- c: 0.014 in (0.35 mm), 0.020 in (0.50 mm), 0.040 in (1.00 mm)

CLP 100

TECHNICAL SPECIFICATIONS

	CLP 100
Scanning Characteristics	
Scanning Method	CCD
Scanning Frequency	500 Hz
Light Source	Visible red light (630 nm)
Reading Distance (Bar Code Dependent)	1.0…2.2 in (25…55 mm)
Resolution	0.005…0.040 in (0.125…1.0 mm)
Bar Code Types	
Bar Code Symbology	Code 39, Interleaved 2/5, Code 128, EAN, Codabar, Interleaved 2/5 B
Readability	10 bar codes per reading gate
Auto Discrimination	6 different symbologies per scan or reading gate
Communications / I/O / Indicators	
Host Interface	RS 232, variable data output format
Baud Rate	1,200…19,200 (software selectable)
Data Format	Data bits, stop bits, parity (software selectable)
LED Indicators	CCD on, reading gate on, good read, no read
Switching Inputs	1 x NPN, maximum 30 V DC
Switching Outputs	1 x NPN, maximum 50 mA
Trigger Methods	Sensor input (I/O interface) / Serial (host interface)
Mechanical / Electrical	
Supply Voltage	Operating voltage 5 V DC ± 5%
Current Consumption	350 mA
Dimensions	End scanning: 2.17 x 0.79 x 1.85 in (55 x 20 x 47 mm); Side scanning: 2.17 x .79 x 2.17 in (55 x 20 x 55 mm)
Weight	Approx. 7 oz (200 g)
Housing / Enclosure Rating	Metal / IP 40
Connectivity	Open cable, 9-pin D-Sub connector
Environmental	
Ambient Operating Temperature	32…104°F (0…40°C)
Storage Temperature	-4…158°F (-20…70°C)
EMV	To IEC 801
Maximum Relative Humidity	30…85%, non-condensing
Programming	Windows™-based CLP Setup Software

MODELS AND PART NUMBERS

	Open Cable End	9-Pin Connector
Front Emitting Scanner		
Model	CLP 100-0110	CLP 100-0010
Part Number	1 018 333	1 018 331
Side Emitting Scanner		
Model	CLP 100-2110	CLP 100-2010
Part Number	1 018 334	1 018 332

PINOUTS

9-pin connector

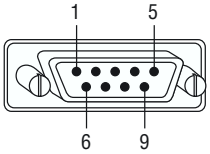

Open cable end

Pin	Signal
1	Sensor
2	RxD (RS 232), Host
3	TxD (RS 232), Host
4	Result “GO/NG”
5	GND
6	Not Assigned
7	RxD (RS 232, TTL), Terminal
8	TxD (RS 232, TTL), Terminal
9	DC +5 V

Color	Signal
Pink	Sensor
Brown	RxD (RS 232), Host
Gray	TxD (RS 232), Host
White	Result “GO/ND”
Black	GND
-	Not Assigned
Yellow	RxD (RS 232, TTL), Terminal
Orange	TxD (RS 232, TTL), Terminal
Red	DC +5 V
Blue	RTS
Green	CTS

CLP 100

DIMENSIONAL DRAWINGS *Dimensions in inches (mm)*

CLP 100 front emitting scanner

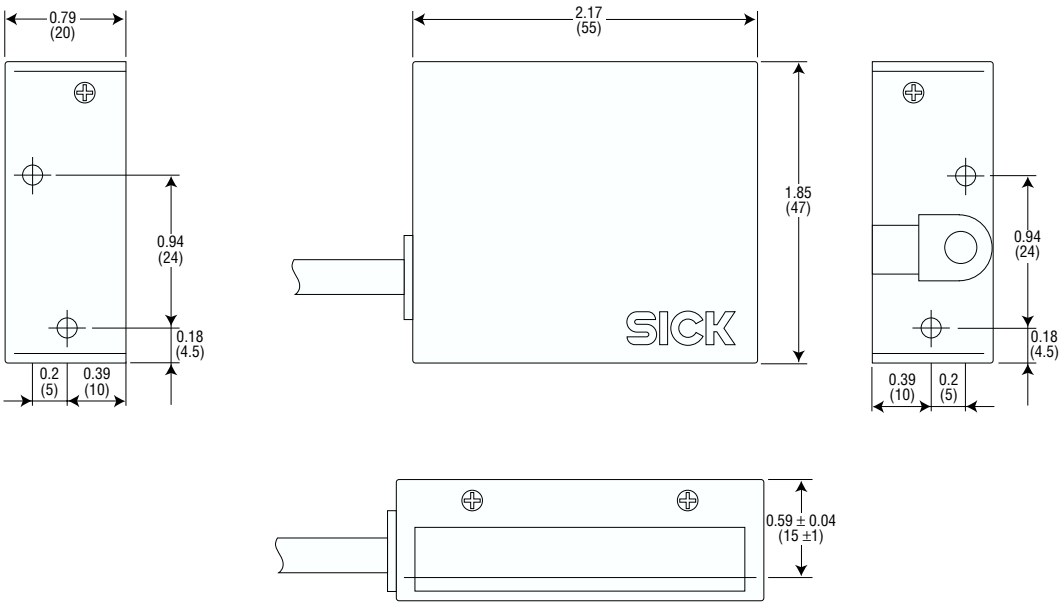

CLP 100 side emitting scanner

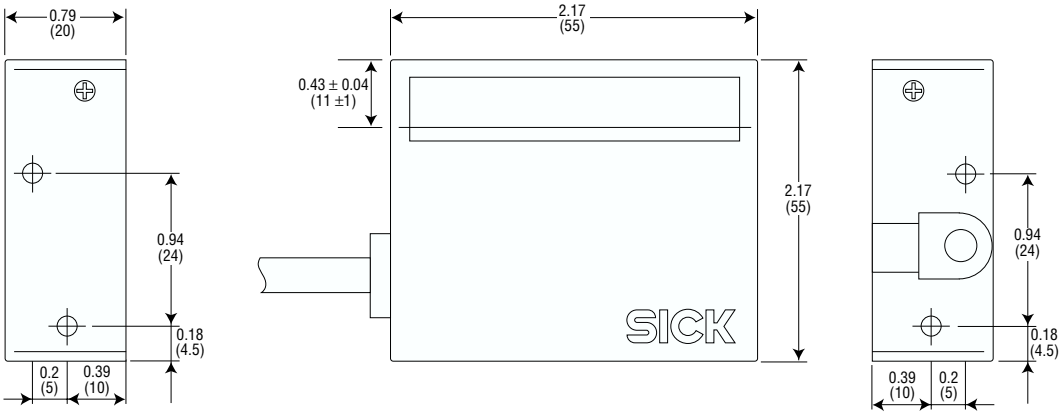

CONNECTION DRAWINGS

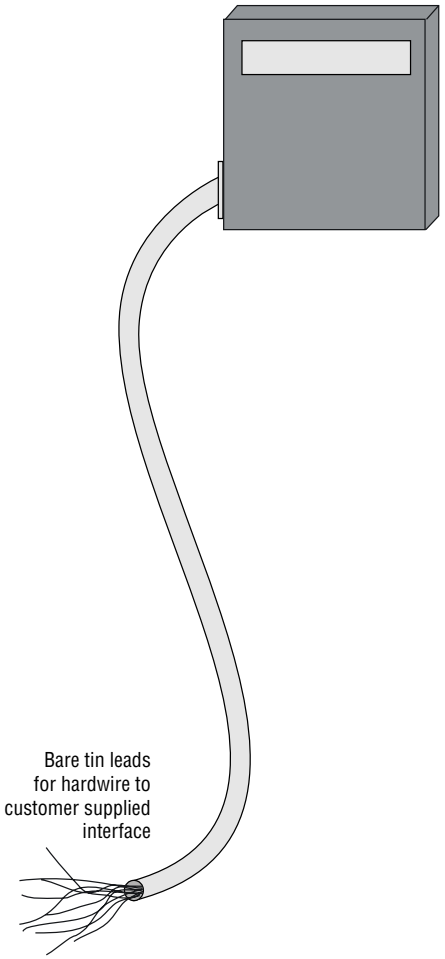

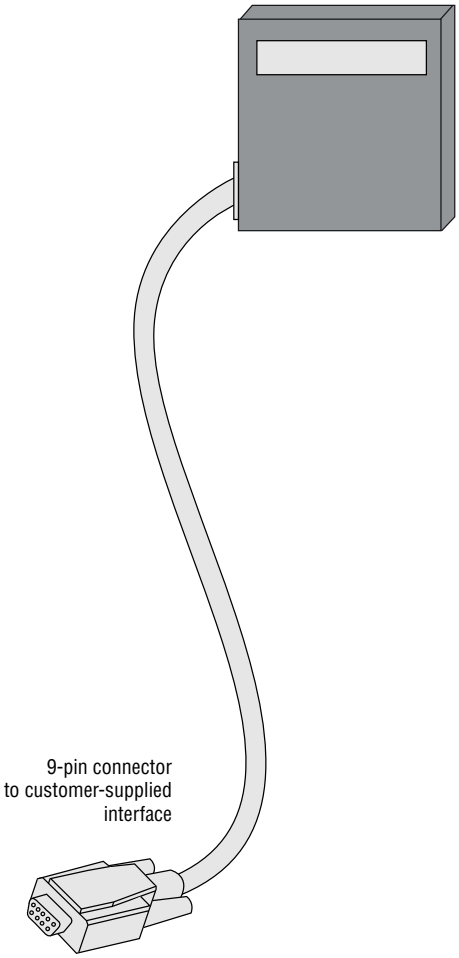

CLV 410/412/414

FEATURES

- All parameters user selectable
- Integrated scanner and decoder
- Profile programming- automatic setup
- Match code capability (match, mismatch and no read outputs)
- Automatic triggering with reflector
- Side emitting housing
- Windows™-based setup software
- Flexible input voltage (5…30 V DC)

Model	Optics Type	Reading Range	Bar Code Resolution	Scan Frequency
CLV 410	Standard	2.0…15.7 in (50…400 mm)	0.008…0.040 in (0.2…1.0 mm)	200…800 Hz (software selectable)
CLV 412	High Density	1.4…3.7 in (35…95 mm)	0.004…0.020 in (0.1…0.5 mm)	200…800 Hz (software selectable)
CLV 414	Standard (Close Range)	1.6…3.9 in (40…100 mm)	0.008…0.020 in (0.2…0.5 mm)	200…800 Hz (software selectable)

Scan Options*	Focus Type	Decoding Method**	Housing/Enclosure*
✓ Line	✓ Fixed Focus	✓ Standard	✓ Front Emitting
✓ Raster	Focus Control	PCX	✓ Side Emitting
Oscillating Mirror	Dynamic Focus Control	SMART	Oscillating Mirror
*ordered separately		**user selectable	*ordered separately

READING RANGES *Dimensions in inches (mm)*

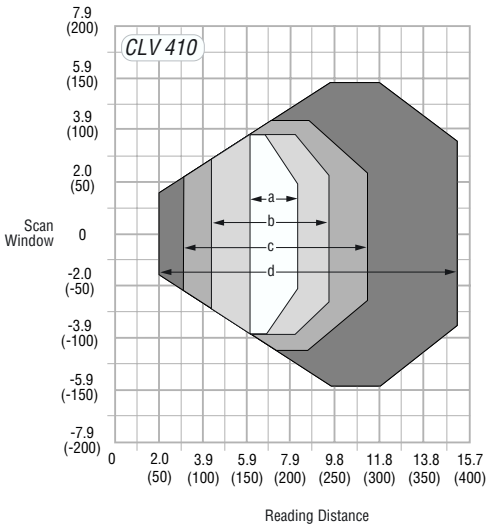

Code Resolution
- a: 0.008 in (0.20 mm)
- b: 0.013 in (0.35 mm)
- c: 0.020 in (0.50 mm)
- d: 0.040 in (1.0 mm)

NOTE: Side Emitting Scanner: The entire reading field is shifted 0.71 in (18 mm) toward the reading window

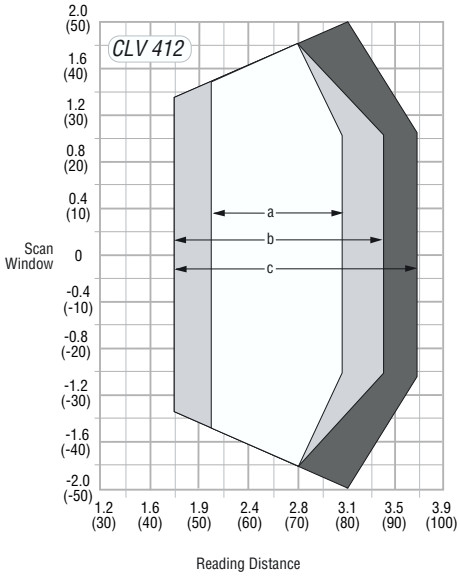

Code Resolution
- a: 0.004 in (0.10 mm)
- b: 0.006 in (0.15 mm)
- c: 0.008 in (0.20 mm)

NOTE: Side Emitting Scanner: The entire reading field is shifted 0.71 in (18 mm) toward the reading window

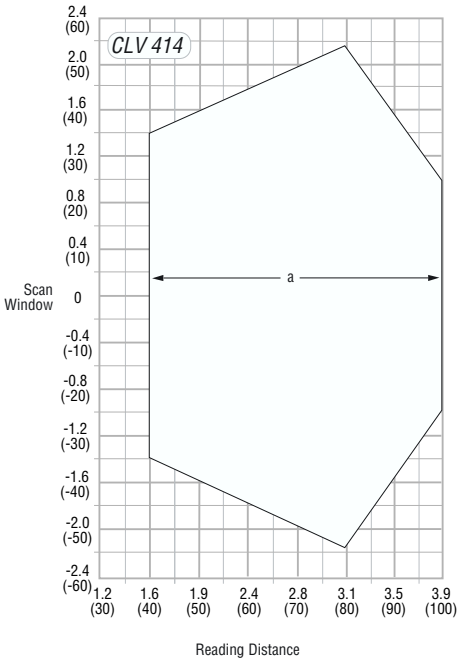

Code Resolution
- a: 0.008 in (0.20 mm)

NOTE: Side Emitting Scanner: The entire reading field is shifted 0.71 in (18 mm) toward the reading window

CLV 410/412/414

TECHNICAL SPECIFICATIONS

	CLV 410	CLV 412	CLV 414
Scanning Characteristics			
Scanning Method	8-sided polygon mirror wheel		
Aperture Angle	Line/raster scanner: 60°; side emitting scanner: 50°		
Scanning Frequency	200…800 Hz (software selectable)		
Light Source	Visible laser diode (670 nm); CDRH Class II		
Reading Distance (Bar Code Dependent)	2.0…15.7 in (50…400 mm)	1.4…3.7 in (35…95 mm)	1.6…3.9 in (40…100 mm)
Resolution	0.008…0.040 in (0.2…1.0 mm)	0.004…0.008 in (0.1…0.2 mm)	0.008…0.020 in (0.2…0.5 mm)
Bar Code Types			
Bar Code Symbology	Code 39, Interleaved 2/5, Industrial 2/5, Codabar, Code 93, EAN/EAN 128, UPC, Code 128, Pharmacode		
Readability	10 bar codes per reading gate		
Auto Discrimination	3 different symbologies per scan or reading gate		
Communications / I/O / Indicators			
Host Interface	RS 232 and RS 422/485, variable data output format		
Baud Rate	300…57,600 (software selectable)		
Data Format	Data bits, stop bits, parity (software selectable)		
Network Configuration	Pass-through; master/slave; RS 485 network		
LED Indicators	Device ready, result, laser on, data		
Switching Inputs	2 x PNP, opto-decoupled, maximum 30 V DC		
Switching Outputs	3 x PNP, maximum 100 mA / 24 V DC; Output 1, Output 2, Output 3		
Trigger Methods	Sensor input (I/O interface) / Serial (Host interface) / Free running / Reflector polling (automatic)		
Mechanical / Electrical			
Supply Voltage	Operating voltage 5…30 V DC		
Current Consumption	125 mA at 24 V DC / 3.0 W		
Dimensions	Line/raster scanner: 2.3 x 2.5 x 1.4 in (59 x 62.7 x 35.2 mm); side emitting scanner: 2.8 x 2.5 x 1.4 in (72 x 62.7 x 35.2 mm)		
Weight	Approx. 8.75 oz (250 g)		
Housing / Enclosure Rating	Die cast zinc / IP 54		
Connectivity	15-pin male D-Sub high density cable, 3 ft (0.9 m) cable length		
Environmental			
Ambient Operating Temperature	32…104°F (0…40°C)		
Storage Temperature	-4…158°F (-20…70°C)		
Vibration	To IEC 68-2-6 test FC		
Shock	To IEC 68-2-27 test EA		
EMV	To IEC 801		
Maximum Relative Humidity	90%, non-condensing		
Programming	Windows™-based CLV Setup Software		

MODELS AND PART NUMBERS

	CLV 410	CLV 412	CLV 414
Front Emitting Line Scanner			
Model	CLV 410-0010	CLV 412-0010	CLV 414-0010
Part Number	1 015 421	1 017 527	1 017 368
Front Emitting Raster Scanner			
Model	CLV 410-1010	CLV 412-1010	CLV 414-1010
Part Number	1 015 427	1 017 528	1 016 767
Side Emitting Line Scanner			
Model	CLV 410-2010	CLV 412-2010	CLV 414-2010
Part Number	1 017 534	1 017 538	1 017 396
Side Emitting Raster Scanner			
Model	CLV 410-3010	CLV 412-3010	CLV 414-3010
Part Number	1 017 536	1 017 540	1 016 831

PINOUTS

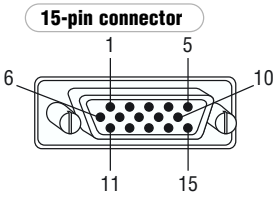

Pin	Signal	Function
1	DC 4.5…30 V	Supply voltage
2	Sensor 2[1]	Switching input teach-in (match code 1)
3	Result 3[2]	Switching output (to PLC)
4	Term RS 422	Termination for data interface 1
5	GND	Ground
6	RD+ (RS 422/485)	Data interface 1 (receiver)
7	RD- (RS 422/485)	Data interface 1 (receiver)
8	TD+ (RS 422/485)	Data interface 1 (transmitter)
9	TD- (RS 422/485)	Data interface 1 (transmitter)
10	RxD (RS 232)	Data interface 2 (receiver)
11	TxD (RS 232)	Data interface 2 (transmitter)
12	Result 1[2]	Switching output (to PLC)
13	Result 2[2]	Switching output (to PLC)
14	Sensor 1[3]	Switching input for ext. reading pulse
15	Sensor GND	Common ground (all inputs)
-	-	Shield

[1] 24 V DC input for Teach Mode
[2] 24 V DC output
[3] External sensor input (24 V DC @ 100 mA) for trigger

CLV 410/412/414

DIMENSIONAL DRAWINGS *Dimensions in inches (mm)*

CLV 410/412/414 front emitting scanner

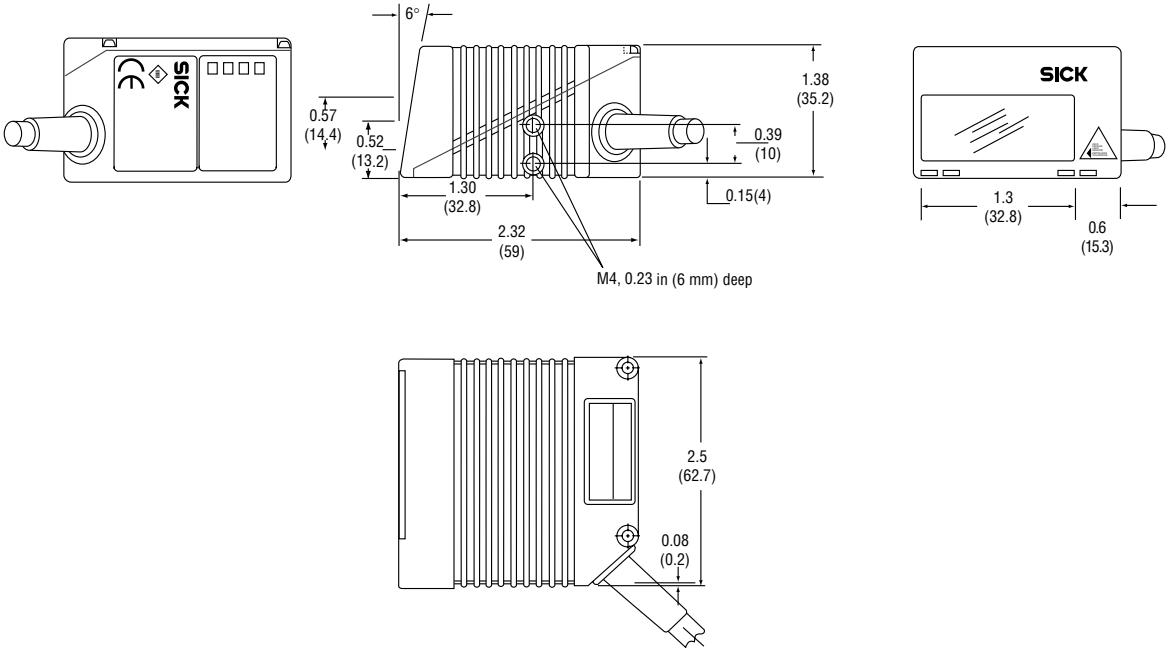

CLV 410/412/414 side emitting scanner

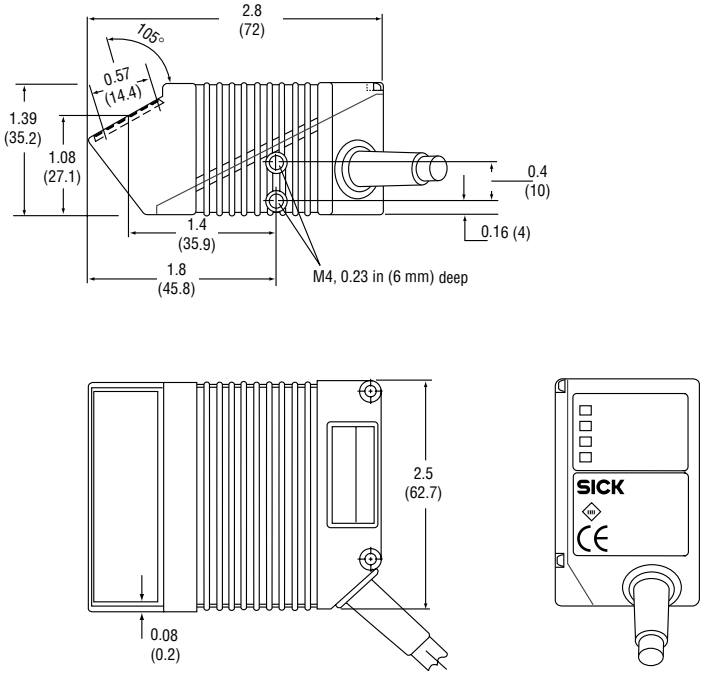

CONNECTION DRAWINGS

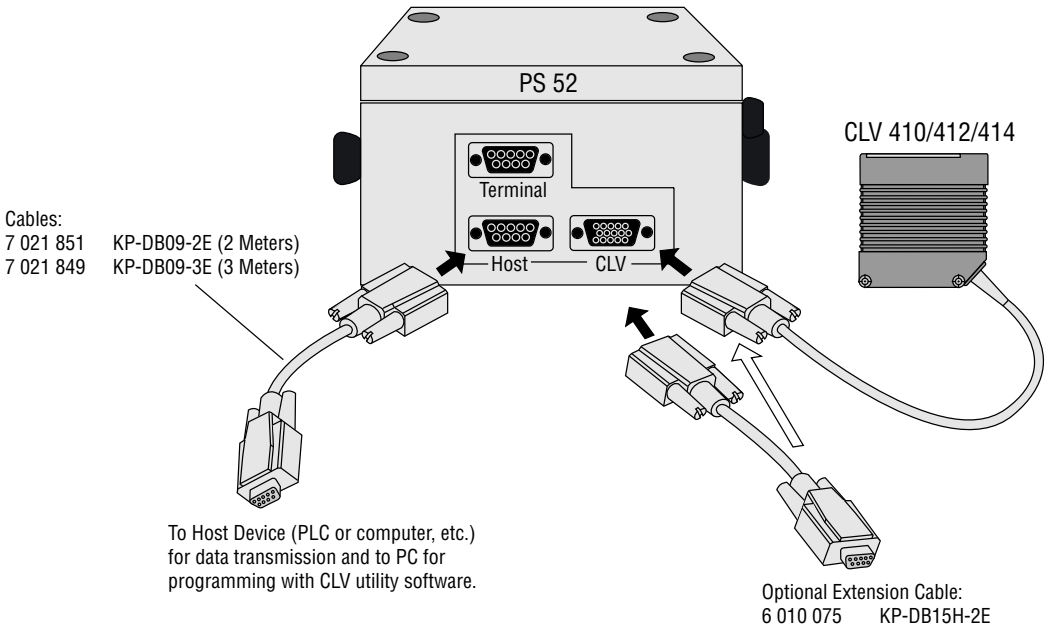

CLV 420/421/422

FEATURES

- High speed (1200 Hz)
- Ultra compact design
- Integrated CAN Bus network
- Automatic triggering
- Profile programming- automatic setup
- Real time decoding and diagnostics
- All parameters software selectable
- Match code capability (match, mismatch, no read outputs)

Model	Optics Type	Reading Range	Bar Code Resolution	Scan Frequency
CLV 420	Standard	2.0…14.0 in (50…365 mm)	0.008…0.040 in (0.20…1.0 mm)	400…1200 Hz (software selectable)
CLV 421	Standard (Long Range)	2.0…28.5 in (50…725 mm)	0.014…0.04 in (0.35…1.0 mm)	400…1200 Hz (software selectable)
CLV 422	High Density	1.5…8.0 in (40…200 mm)	0.006…0.02 in (0.15…0.5 mm)	400…1200 Hz (software selectable)

Scan Options*	Focus Type	Decoding Method**	Housing/Enclosure*
✓ Line	✓ Fixed Focus	✓ Standard	✓ Front Emitting
✓ Raster	Focus Control	PCX	✓ Side Emitting
Oscillating Mirror	Dynamic Focus Control	SMART	Oscillating Mirror
*ordered separately		**user selectable	*ordered separately

READING RANGES *Dimensions in inches (mm)*

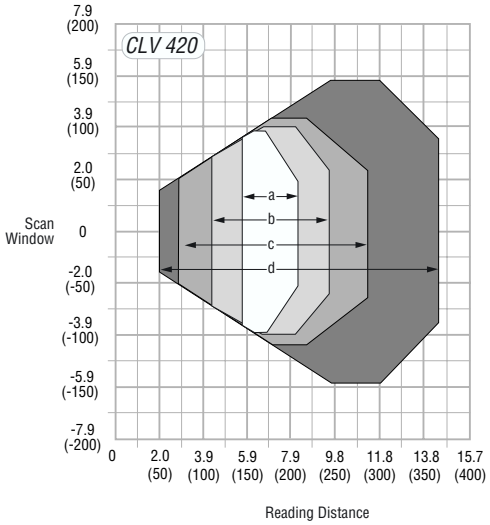

Code Resolution
- a: 0.008 in (0.20 mm)
- b: 0.013 in (0.35 mm)
- c: 0.020 in (0.50 mm)
- d: 0.040 in (1.0 mm)

NOTE: Side Emitting Scanner: The entire reading field is shifted 0.71 in (18 mm) toward the reading window

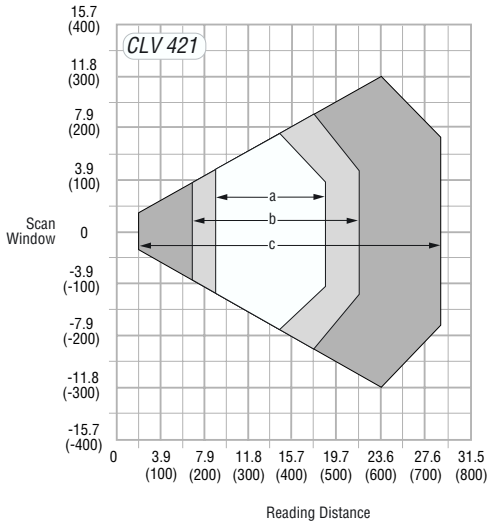

Code Resolution
- a: 0.013 in (0.35 mm)
- b: 0.020 in (0.50 mm)
- c: 0.040 in (1.0 mm)

NOTE: Side Emitting Scanner: The entire reading field is shifted 0.71 in (18 mm) toward the reading window

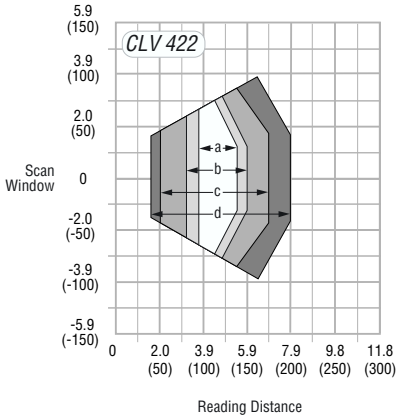

Code Resolution
- a: 0.006 in (0.15 mm)
- b: 0.008 in (0.20 mm)
- c: 0.013 in (0.35 mm)
- d: 0.020 in (0.50 mm)

NOTE: Side Emitting Scanner: The entire reading field is shifted 0.71 in (18 mm) toward the reading window

CLV 420/421/422

TECHNICAL SPECIFICATIONS

	CLV 420	CLV 421	CLV 422
Scanning Characteristics			
Scanning Method	8-sided polygon mirror wheel		
Aperture Angle	50°		
Scanning Frequency	400…1200 Hz (software selectable)		
Light Source	Visible laser diode (670 nm); CDRH Class II		
Reading Distance (Bar Code Dependent)	2.0…14.0 in (50…365 mm)	2.0…28.5 in (50…725 mm)	1.5…8.0 in (40…200 mm)
Resolution	0.008…0.040 in (0.20…1.0 mm)	0.014…0.04 in (0.35…1.0 mm)	0.006…0.02 in (0.15…0.5 mm)
Bar Code Types			
Bar Code Symbology	Code 39, Interleaved 2/5, Industrial 2/5, Codabar, Code 93, EAN/EAN 128, UPC, Code 128, Pharmacode		
Readability	10 bar codes per reading gate		
Auto Discrimination	3 different symbologies per scan or reading gate		
Communications / I/O / Indicators			
Host Interface	RS 232 and RS 422/485, variable data output (software selectable)		
Baud Rate	300…57,600 (software selectable)		
Data Format	Data bits, stop bits, parity (software selectable)		
Network Configuration	Pass-through; master/slave; RS 485 network, CAN Bus		
LED Indicators	Device ready, result, laser on, data		
Switching Inputs	2 x PNP, opto-decoupled, maximum 30 V DC		
Switching Outputs	2 x PNP, maximum 100 mA / 24 V DC; Output 1, Output 2		
Trigger Methods	Sensor input (I/O interface) / Serial (Host interface) / Free running / Reflector polling (automatic)		
Mechanical / Electrical			
Supply Voltage	Operating voltage 10…30 V DC		
Current Consumption	145 mA at 24 V DC / 3.5 W		
Dimensions	Line/raster scanner: 2.3 x 2.5 x 1.4 in (59 x 63 x 35 mm); side emitting scanner: 2.8 x 2.5 x 1.4 in (72 x 63 x 35 mm)		
Weight	Approx. 8.75 oz (250 g) including cable		
Housing / Enclosure Rating	Die cast zinc / IP 65		
Connectivity	15-pin male D-Sub high density cable, 3 ft (0.9 m) cable length		
Environmental			
Ambient Operating Temperature	32…104°F (0…40°C)		
Storage Temperature	-4…158°F (-20…70°C)		
Vibration	To IEC 60-2-6 test FC		
Shock	To IEC 60-2-27 test EA		
EMV	To IEC 801		
Maximum Relative Humidity	90%, non-condensing		
Programming	Windows™-based CLV Setup Software		

MODELS AND PART NUMBERS

	CLV 420	CLV 421	CLV 422
Front Emitting Line Scanner			
Model	CLV 420-0010	CLV 421-0010	CLV 422-0010
Part Number	1 022 031	1 022 547	1 022 548
Front Emitting Raster Scanner			
Model	CLV 420-1010	CLV 421-1010	CLV 422-1010
Part Number	1 022 032	1 022 616	1 022 619
Side Emitting Line Scanner			
Model	CLV 420-2010	CLV 421-2010	CLV 422-2010
Part Number	1 022 033	1 022 617	1 022 620
Side Emitting Raster Scanner			
Model	CLV 420-3010	CLV 421-3010	CLV 422-3010
Part Number	1 022 034	1 022 618	1 022 621

PINOUTS

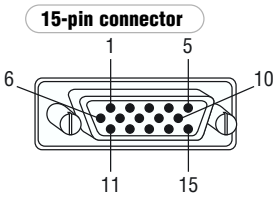

Pin	Signal	Function
1	10…30 V	Power supply
2	RxD (Terminal)	Terminal interface (receiver)
3	TxD (Terminal)	Terminal interface (transmitter)
4	Sensor 2	Switching input, variable function
5	GND	Ground
6	RD+ (RS 422/485)	Host interface (receiver)
7	RD- (RS 422/485)	Host interface (receiver)
	RxD (RS 232)	-
8	TD+ (RS 422/485)	Host interface (transmitter)
9	TD- (RS 422/485)	Host interface (transmitter)
	TxD (RS 232)	-
10	CAN H	CAN Bus (IN / OUT)
11	CAN L	CAN Bus (IN / OUT)
12	Result 1	Switching output, variable function
13	Result 2	Switching output, variable function
14	Sensor 1	Switching input for ext. reading pulse
15	Sensor GND	Common ground (all inputs)
-	-	Shield

CLV 420/421/422

DIMENSIONAL DRAWINGS *Dimensions in inches (mm)*

CLV 420/421/422 front emitting scanner

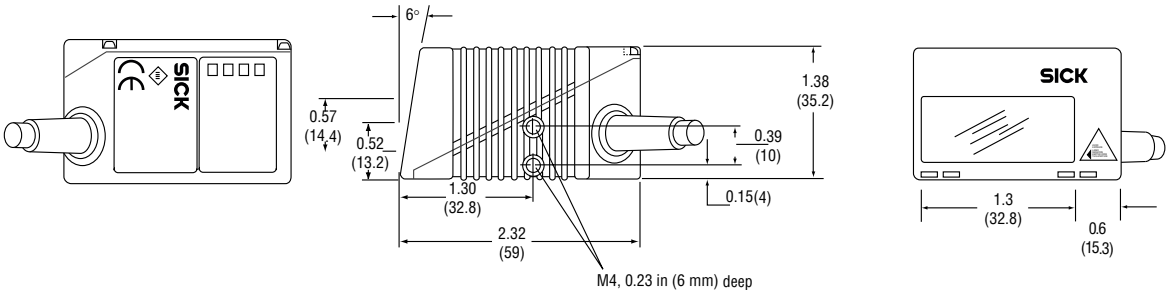

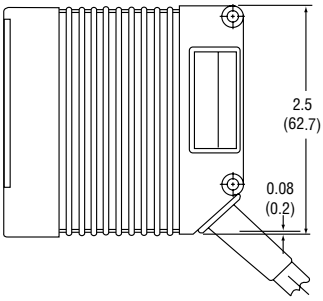

CLV 420/421/422 side emitting scanner

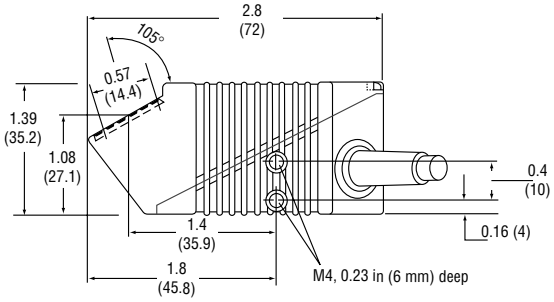

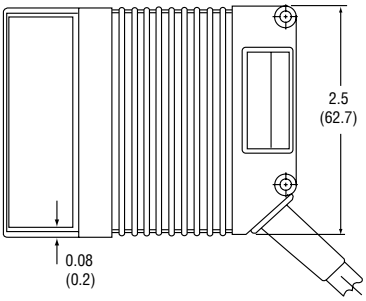

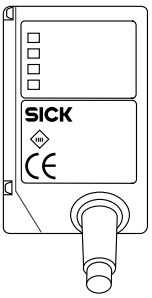

CONNECTION DRAWINGS

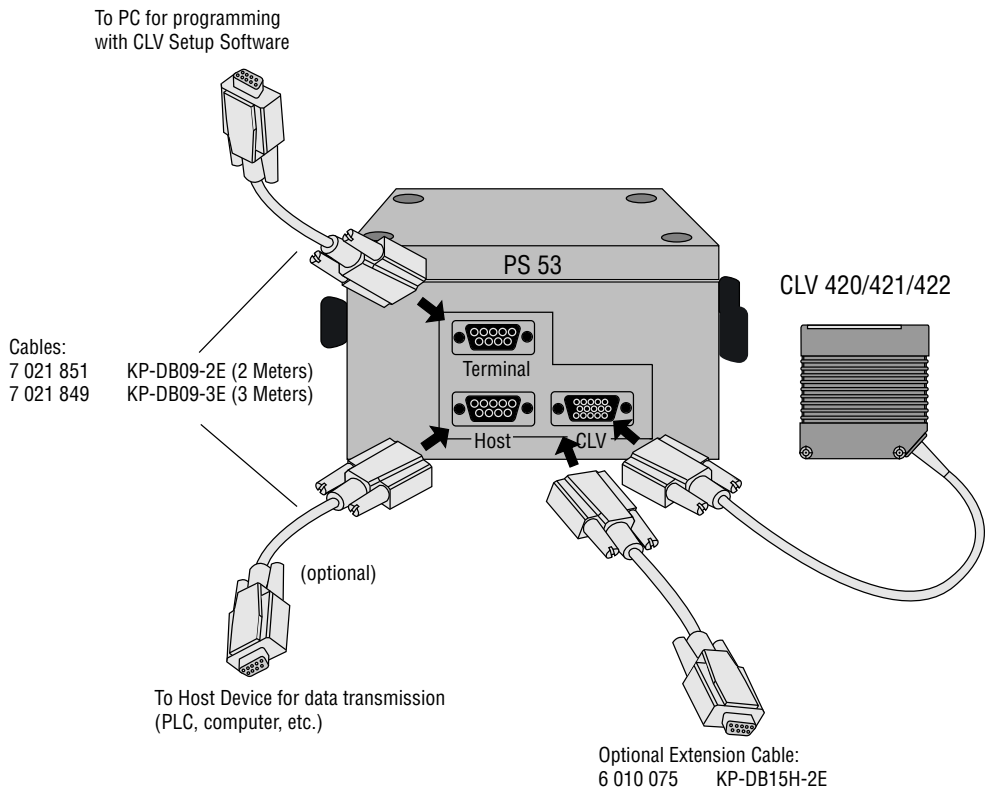

CLV 430/431/432

FEATURES

- Compact design
- Integrated CAN Bus network
- SMART technology
- Profile programming- automatic setup
- Real time decoding and diagnostics
- All parameters software selectable
- Automatic triggering
- Match code capability (match, mismatch, no read outputs)

Model	Optics Type	Reading Range	Bar Code Resolution	Scan Frequency
CLV 430	Standard	2.0…31.5 in (51…800 mm)	0.008…0.040 in (0.2…1.0 mm)	300…800 Hz (software selectable)
CLV 431	Standard	3.5…16.7 in (89…424 mm)	0.008…0.040 in (0.2…1.0 mm)	300…800 Hz (software selectable)
CLV 432	Standard (Close Range)	2.0…10.0 in (51…254 mm)	0.008…0.040 in (0.2…1.0 mm)	300…800 Hz (software selectable)

Scan Options*	Focus Type	Decoding Method**	Housing/Enclosure*
✓ Line	✓ Fixed Focus	✓ Standard	✓ Front Emitting
✓ Raster	Focus Control	PCX	✓ Side Emitting
✓ Oscillating Mirror	Dynamic Focus Control	✓ SMART	✓ Oscillating Mirror
*ordered separately		**user selectable	*ordered separately

READING RANGES *Dimensions in inches (mm)*

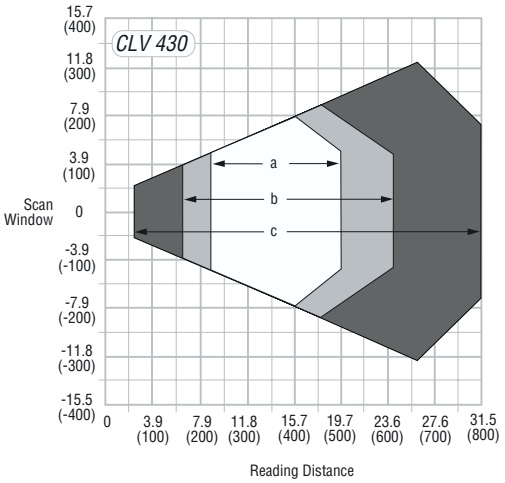

NOTE: Raster Height: The raster height is 0.60 in [15 mm (8 lines)] at a reading distance of 7.87 in (200 mm)

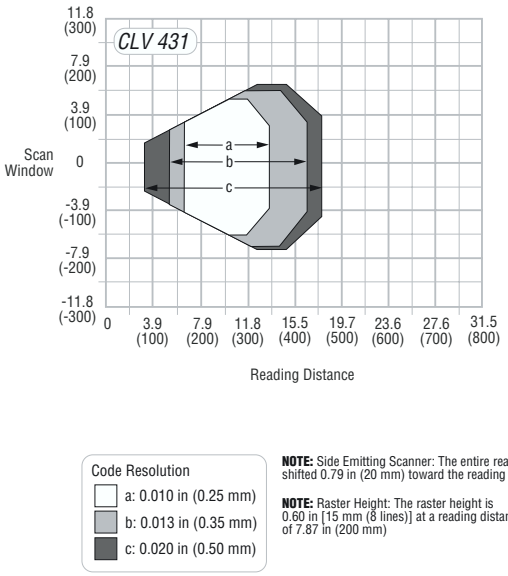

NOTE: Side Emitting Scanner: The entire reading field is shifted 0.79 in (20 mm) toward the reading window

NOTE: Raster Height: The raster height is 0.60 in [15 mm (8 lines)] at a reading distance of 7.87 in (200 mm)

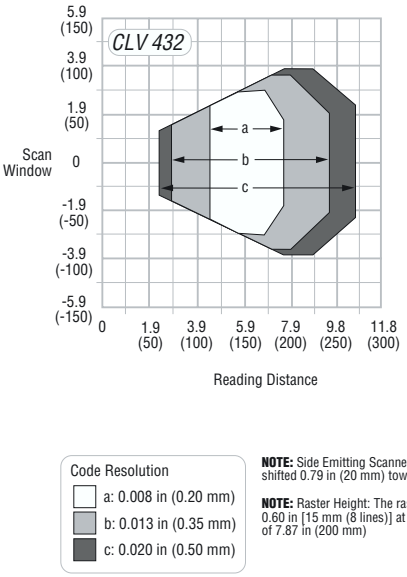

NOTE: Side Emitting Scanner: The entire reading field is shifted 0.79 in (20 mm) toward the reading window

NOTE: Raster Height: The raster height is 0.60 in [15 mm (8 lines)] at a reading distance of 7.87 in (200 mm)

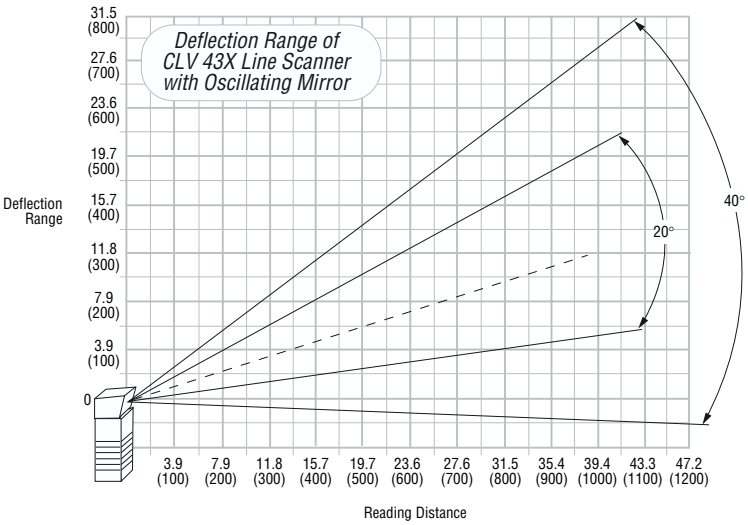

CLV 430/431/432

TECHNICAL SPECIFICATIONS

	CLV 430	CLV 431	CLV 432
Scanning Characteristics			
Scanning Method	8-sided polygon mirror wheel		
Aperture Angle	Maximum 50°		
Scanning Frequency	300…800 Hz (software selectable)		
Light Source	Visible laser diode (670 nm); CDRH Class II		
Reading Distance (Bar Code Dependent)	2.0…31.5 in (51…800 mm)	3.5…16.7 in (89…424 mm)	2.0…10.0 in (51…254 mm)
Resolution	0.008…0.040 in (0.2…1.0 mm)		
Bar Code Types			
Bar Code Symbology	Code 39, Interleaved 2/5, Codabar, Code 93, EAN/EAN 128, UPC, Code 128, Pharmacode		
Readability	1 to 20 bar codes per reading gate (standard decoder); 1 to 6 (SMART)		
Auto Discrimination	8 different symbologies per scan or reading gate		
Communications / I/O / Indicators			
Host Interface	RS 232 and RS 422/485, variable data output format (software selectable)		
Baud Rate	300…57,600 (software selectable)		
Data Format	Data bits, stop bits, parity (software selectable)		
Network Configuration	Pass-through; master/slave; RS 485 network; CAN Bus		
LED Indicators	Device ready, result, sensor, data		
Switching Inputs	2 x PNP, opto-decoupled, maximum 30 V DC		
Switching Outputs	2 x PNP, maximum 100 mA / 24 V DC		
Trigger Methods	Sensor input (I/O interface) / Serial (host interface) / Free running / Reflector polling (automatic)		
Mechanical / Electrical			
Supply Voltage	Operating voltage 10…30 V DC		
Current Consumption	Line/raster scanner: 208 mA at 24 V DC / 5.0 W; Osc mirror: 258 mA at 24 V DC / 6.2 W		
Dimensions	Line/raster scanner: 3.5 x 2.4 x 1.4 in (90 x 60 x 35.7 mm); Osc mirror: 3.9 x 3.6 x 1.5 in (99.8 x 92.2 x 37.8 mm)		
Weight	Approx. 14.7 oz (420 g)		
Housing / Enclosure Rating	Die cast zinc / IP 65		
Connectivity	15-pin male D-Sub high density connector		
Environmental			
Ambient Operating Temperature	32…104°F (0…40°C)		
Storage Temperature	-4…158°F (-20…70°C)		
Vibration	To IEC 68-2-6 test FC		
Shock	To IEC 68-2-27 test EA		
EMV	To IEC 801		
Maximum Relative Humidity	90%, non-condensing		
Programming	Windows™-based CLV Setup Software		

MODELS AND PART NUMBERS

	CLV 430	CLV 431	CLV 432
Front Emitting Line Scanner			
Model	CLV 430-0010	CLV 431-0010	CLV 432-0010
Part Number	1 017 585	1 017 622	1 017 623
Front Emitting Raster Scanner			
Model	CLV 430-1010	CLV 431-1010	CLV 432-1010
Part Number	1 016 705	1 016 679	1 016 680
Side Emitting Line Scanner			
Model	-	CLV 431-2010	CLV 432-2010
Part Number	-	1 016 746	1 016 748
Side Emitting Raster Scanner			
Model	-	CLV 431-3010	CLV 432-3010
Part Number	-	1 016 747	1 016 749
Oscillating Mirror Scanner			
Model	CLV 430-6010	CLV 431-6010	CLV 432-6010
Part Number	1 017 981	1 017 982	1 017 983

PINOUTS

15-pin connector

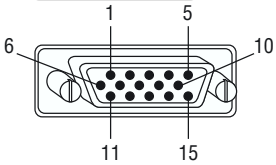

Pin	Signal	Function
1	10…30 V	Supply voltage
2	RxD (Terminal)	Data interface 2 (receiver)
3	TxD (Terminal)	Data interface 2 (transmitter)
4	Sensor 2	Switching input, variable function
5	GND	Ground
6	RD+ (RS 422/485)	Data interface 1 (receiver)
7	RD- (RS 422/485)	Data interface 1 (receiver)
	RxD (RS 232)	-
8	TD+ (RS 422/485)	Data interface 1 (transmitter)
9	TD- (RS 422/485)	Data interface 1 (transmitter)
	TxD (RS 232)	-
10	CAN H	CAN Bus (IN / OUT)
11	CAN L	CAN Bus (IN / OUT)
12	Result 1	Switching output, variable function
13	Result 2	Switching output, variable function
14	Sensor 1	Switching input for ext. reading pulse
15	Sensor GND	Common ground (all inputs)
-	-	Shield

CLV 430/431/432

DIMENSIONAL DRAWINGS *Dimensions in inches (mm)*

CLV 430/431/432 front emitting scanner

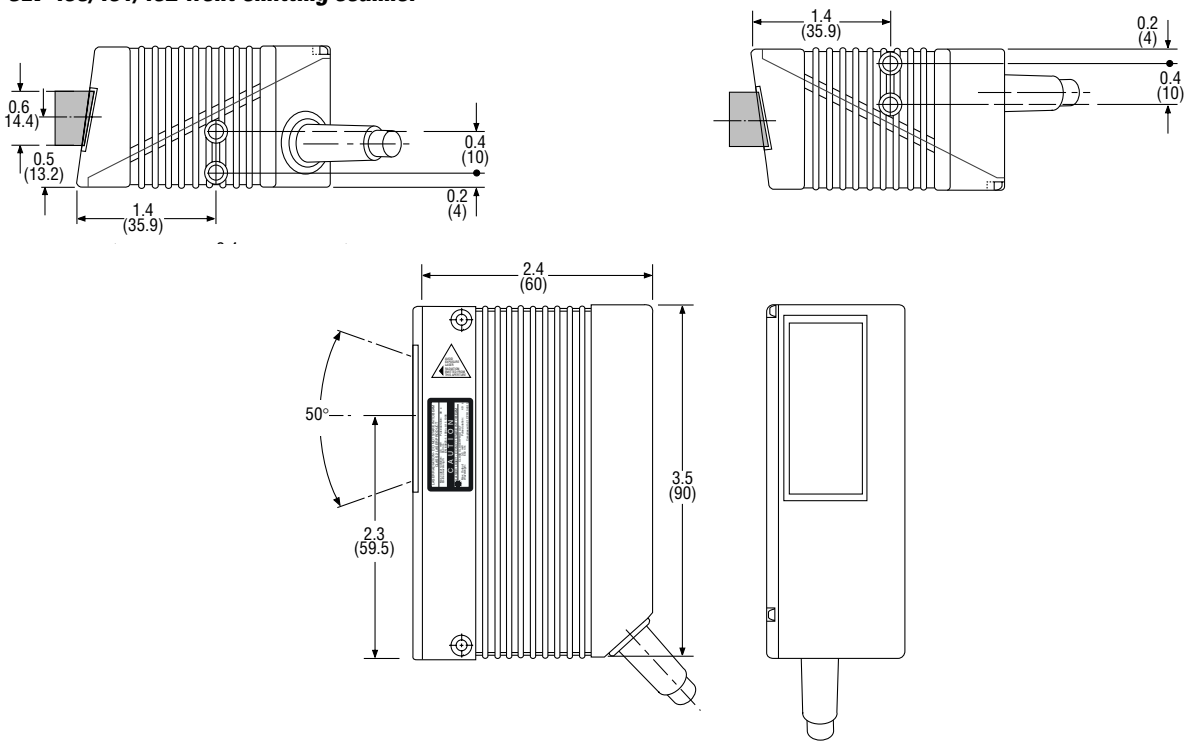

CLV 430/431/432 oscillating mirror scanner

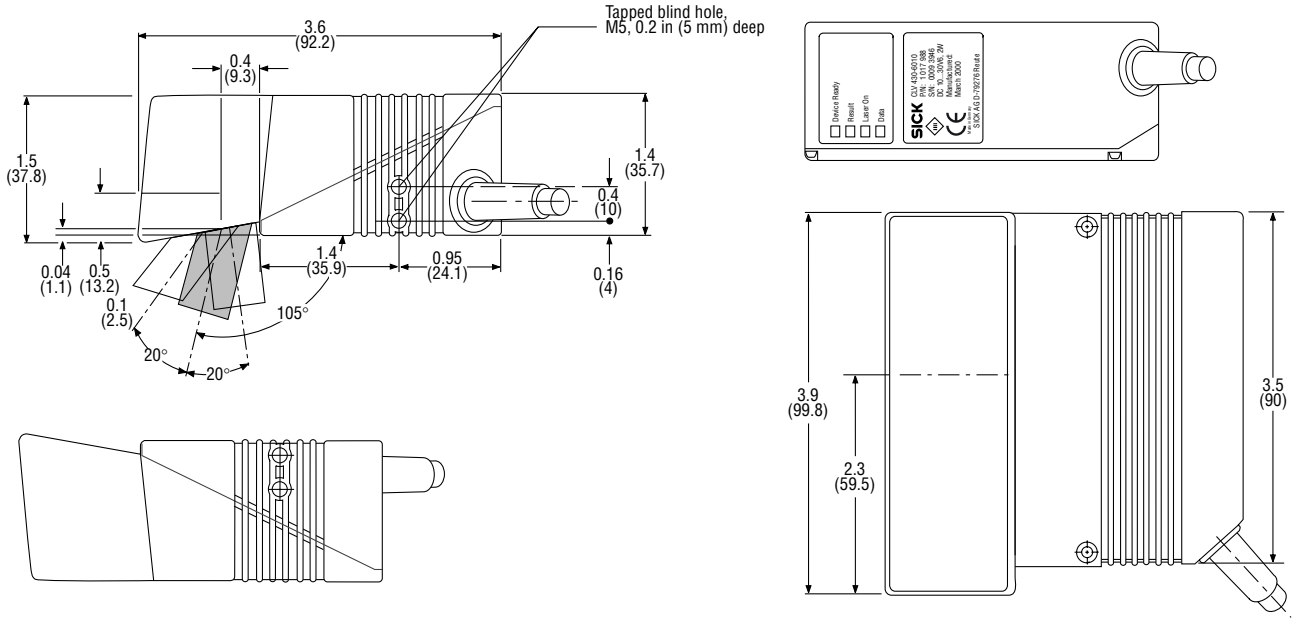

CONNECTION DRAWINGS

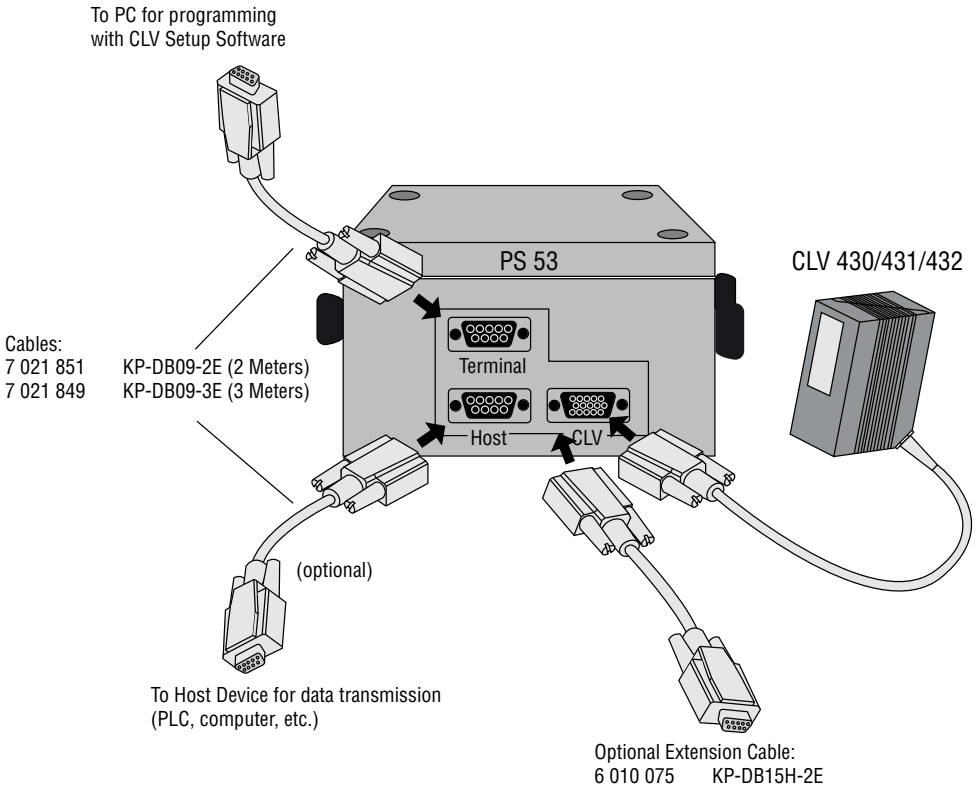

CLV 440/442

FEATURES

- Compact design
- Dynamic Focus Control
- Integrated CAN Bus network
- SMART technology
- Automatic triggering
- Profile programming- automatic setup
- Real time decoding and diagnostics
- All parameters user selectable

Model	Optics Type	Reading Range	Bar Code Resolution	Scan Frequency
CLV 440	Standard	2.0…31.5 in (51…800 mm)	0.008…0.040 in (0.2…1.0 mm)	300…800 Hz (software selectable)
CLV 442	High Density	1.2…13.4 in (30…340 mm)	0.005…0.014 in (0.15…0.35 mm)	300…800 Hz (software selectable)

Scan Options*	Focus Type	Decoding Method**	Housing/Enclosure*
✓ Line	Fixed Focus	✓ Standard	✓ Front Emitting
Raster	Focus Control	PCX	Side Emitting
✓ Oscillating Mirror	✓ Dynamic Focus Control	✓ SMART	✓ Oscillating Mirror
*ordered separately		**user selectable	*ordered separately

READING RANGES *Dimensions in inches (mm)*

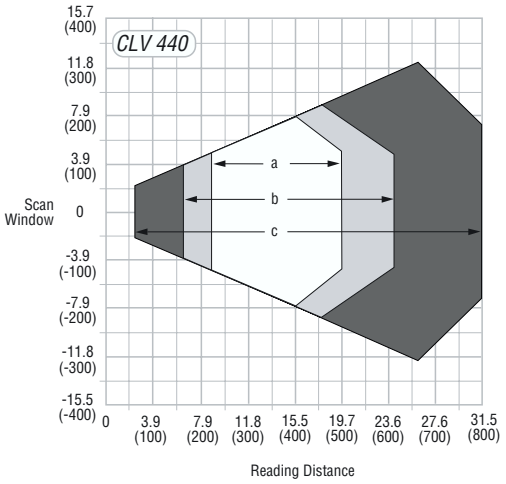

Code Resolution
- a: 0.013 in (0.35 mm)
- b: 0.02 in (0.50 mm)
- c: 0.040 in (1.0 mm)

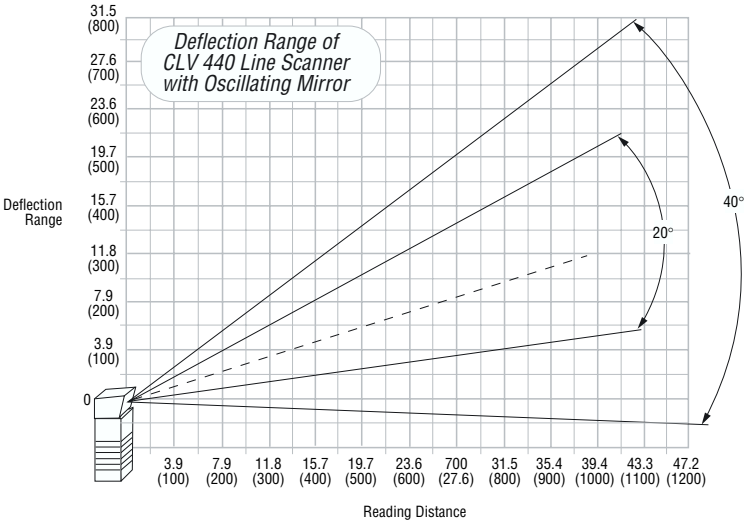

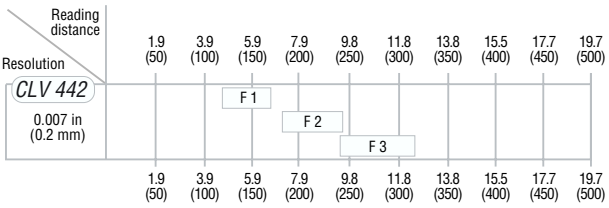

Focus Position

F 1:	5.5 in (140 mm)
F 2:	8.5 in (215 mm)
F 3:	11.0 in (280 mm)

CLV 440/442

TECHNICAL SPECIFICATIONS

	CLV 440	CLV 442
Scanning Characteristics		
Scanning Method	8-sided polygon mirror wheel	
Aperture Angle	Maximum 50°	
Scanning Frequency	300…800 Hz (software selectable)	
Light Source	Visible laser diode (670 nm); CDRH Class II	
Reading Distance (Bar Code Dependent)	2…31.5 in (51…800 mm)	1.2…13.4 in (30…340 mm)
Resolution	0.008…0.040 in (0.2…1.0 mm)	0.005…0.013 in (0.15…0.35 mm)
Bar Code Types		
Bar Code Symbology	Code 39, Interleaved 2/5, Codabar, Code 93, EAN/EAN 128, UPC, Code 128, Pharmacode	
Readability	1 to 20 bar codes per reading gate (standard decoder); 1 to 6 (SMART)	
Auto Discrimination	8 different symbologies per scan or reading gate	
Communications / I/O / Indicators		
Host Interface	RS 232 and RS 422/485, variable data output format (software selectable)	
Baud Rate	300…57,600 (software selectable)	
Data Format	Data bits, stop bits, parity (software selectable)	
Network Configuration	Pass-through; master/slave; RS 485 network; CAN Bus	
LED Indicators	Device ready, result, laser on, data	
Switching Inputs	2 x PNP, Opto-decoupled / maximum 30 V DC	
Switching Outputs	2 x PNP, 100 mA / 24 V DC; variable pulse duration (10…990 ms)	
Trigger Methods	Sensor input (I/O interface) / Serial (host interface) / Free running / Reflector polling (automatic)	
Mechanical / Electrical		
Supply Voltage	Operating voltage 10…30 V DC	
Current Consumption	Line scanner: 208 mA at 24 V DC / 5.0 W; Osc mirror: 258 mA at 24 V DC / 6.2 W	
Dimensions	Line scanner: 3.5 x 2.4 x 1.4 in (90 x 60 x 35.7 mm); Osc mirror: 3.9 x 3.6 x 1.5 in (99.8 x 92.2 x 37.8 mm)	
Weight	Approx. 1.0 lb (480 g)	
Housing / Enclosure Rating	Die cast zinc / IP 65	
Connectivity	15-pin male D-Sub high density connector	
Environmental		
Ambient Operating Temperature	32…104°F (0…40°C)	
Storage Temperature	-4…158°F (-20…70°C)	
Vibration	To IEC 68-2-6 test FC	
Shock	To IEC 68-2-27 test EA	
EMV	To IEC 801	
Maximum Relative Humidity	90%, non-condensing	
Programming	Windows™-based CLV Setup Software	

MODELS AND PART NUMBERS

	CLV 440	CLV 442
Front Emitting Line Scanner		
Model	CLV 440-0010	CLV 442-0010
Part Number	1 017 588	1 017 595
Oscillating Mirror Scanner		
Model	CLV 440-6010	-
Part Number	1 017 984	-

PINOUTS

15-pin connector

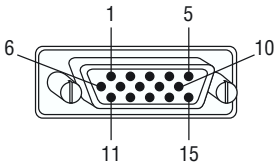

Pin	Signal	Function
1	10…30 V	Supply voltage
2	RxD (Terminal)	Data interface 2 (receiver)
3	TxD (Terminal)	Data interface 2 (transmitter)
4	Sensor 2	Switching input, variable function
5	GND	Ground
6	RD+ (RS 422/485)	Data interface 1 (receiver)
7	RD- (RS 422/485)	Data interface 1 (receiver)
	RxD (RS 232)	-
8	TD+ (RS 422/485)	Data interface 1 (transmitter)
9	TD- (RS 422/485)	Data interface 1 (transmitter)
	TxD (RS 232)	-
10	CAN H	CAN Bus (IN / OUT)
11	CAN L	CAN Bus (IN / OUT)
12	Result 1	Switching output, variable function
13	Result 2	Switching output, variable function
14	Sensor 1	Switching input for ext. reading pulse
15	Sensor GND	Common ground (all inputs)
-	-	Shield

CLV 440/442

DIMENSIONAL DRAWINGS *Dimensions in inches (mm)*

CLV 440/442 front emitting scanner

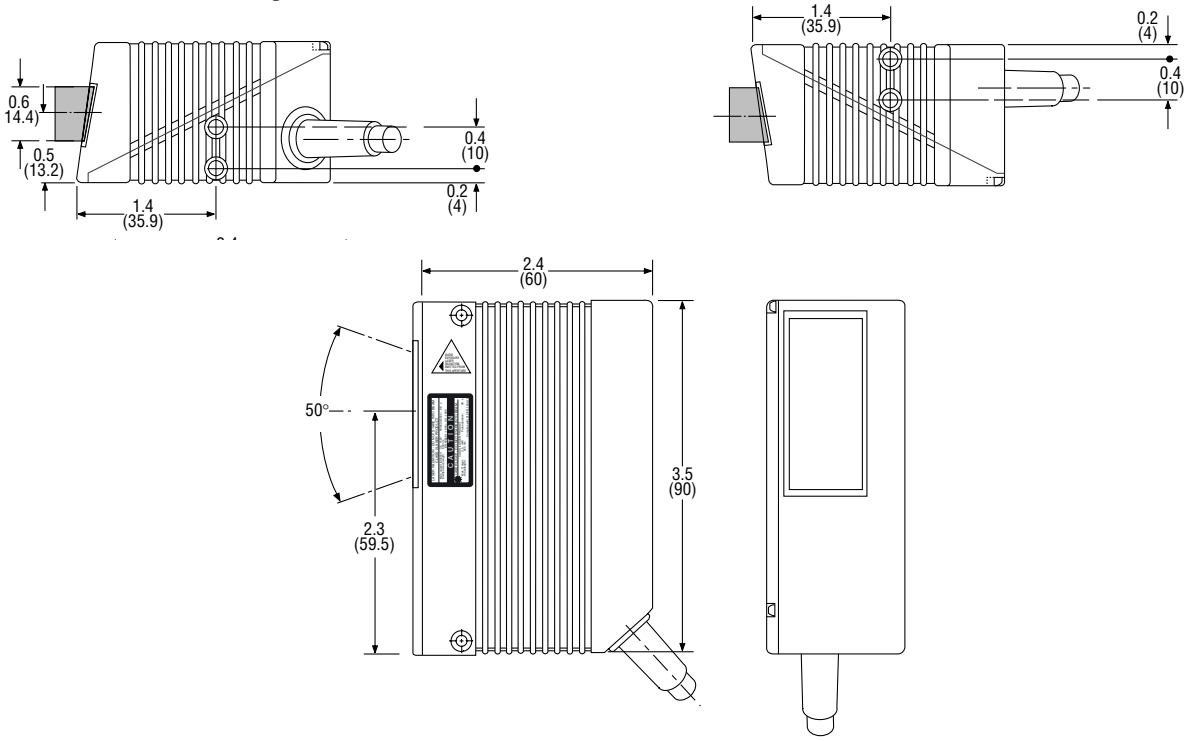

CLV 440 oscillating mirror scanner

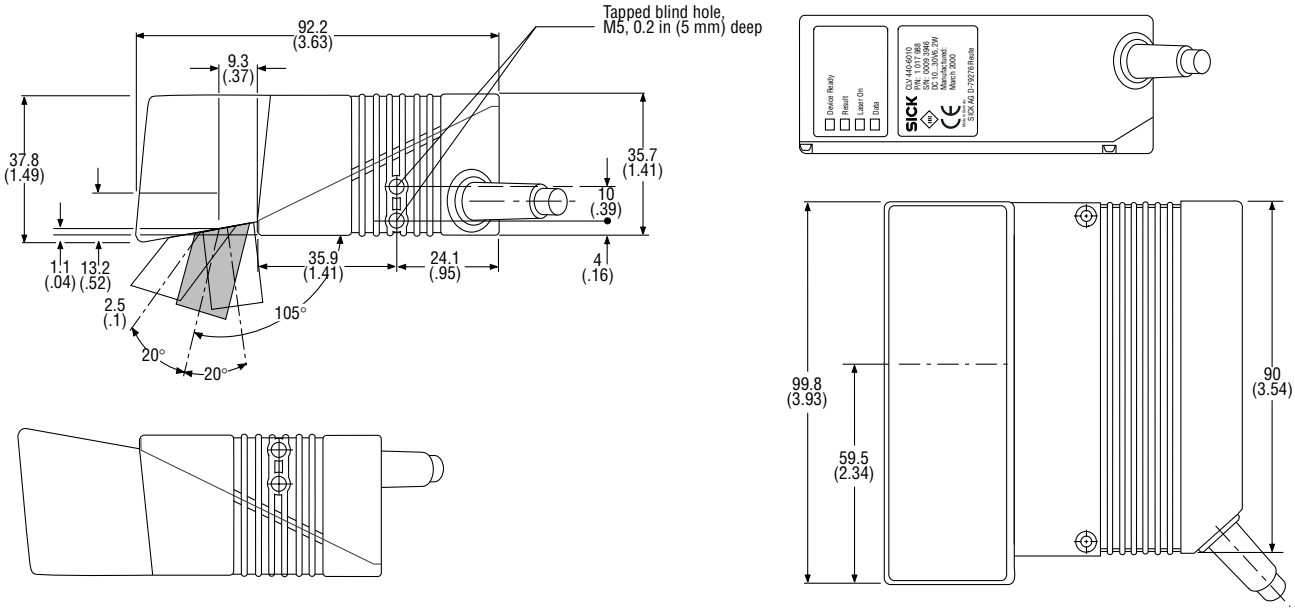

CONNECTION DRAWINGS

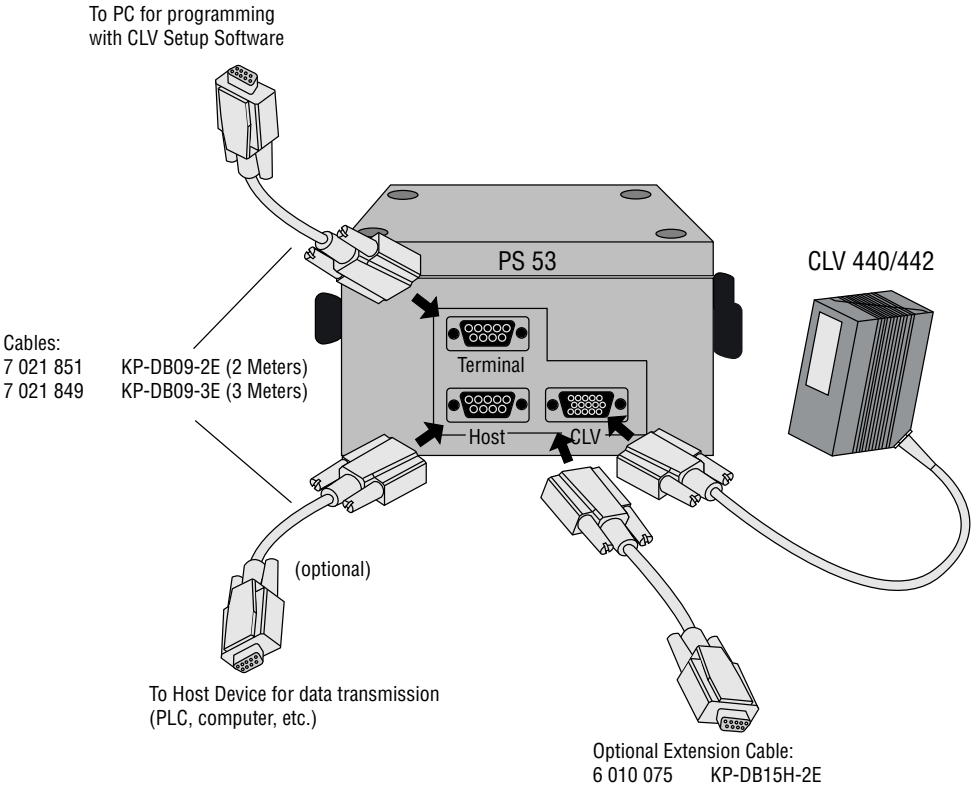

CiMAX® 7500A/7550A/7555A

FEATURES

- Up to 1200 Hz
- "C" programmable
- Factory configured to meet specific applications needs
- Minimizes post-processing of data
- Open architecture, connects to factory network
- SDS, DeviceNet and Ethernet connectivity
- CIX® (Code Information eXtraction) Technology
- Integrated scanner and decoder

Model	Optics Type	Reading Range	Bar Code Resolution	Scan Frequency
CiMAX 7500A	Standard	2.0…38.0 in (51…965 mm)	0.008 in (0.20 mm)	1200 Hz
CiMAX 7550A	Standard	2.0…38.0 in (51…965 mm)	0.008 in (0.20 mm)	1200 Hz
CiMAX 7555A	Standard	2.0…38.0 in (51…965 mm)	0.008 in (0.20 mm)	1200 Hz

Scan Options*	Focus Type	Decoding Method**	Housing/Enclosure*
✓ Line	✓ Fixed Focus	✓ Standard	✓ Front Emitting
✓ Raster	Focus Control	PCX	✓ Side Emitting
✓ Oscillating Mirror	Dynamic Focus Control	✓ CIX	Oscillating Mirror
*ordered separately		**user selectable	*ordered separately

READING RANGES *Dimensions in inches (mm)*

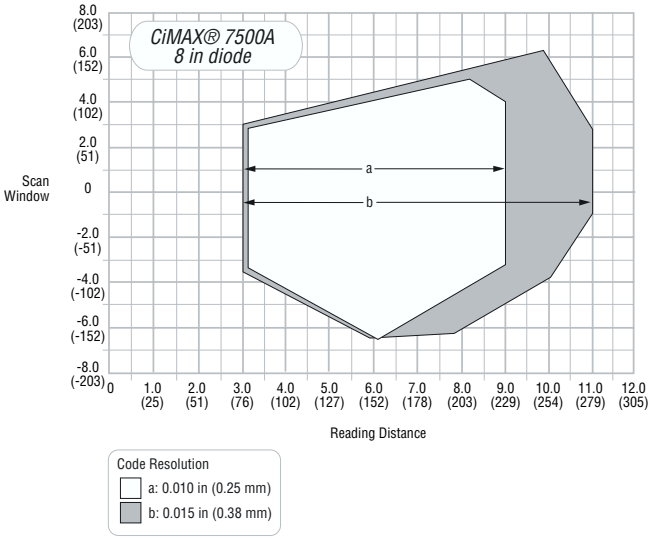

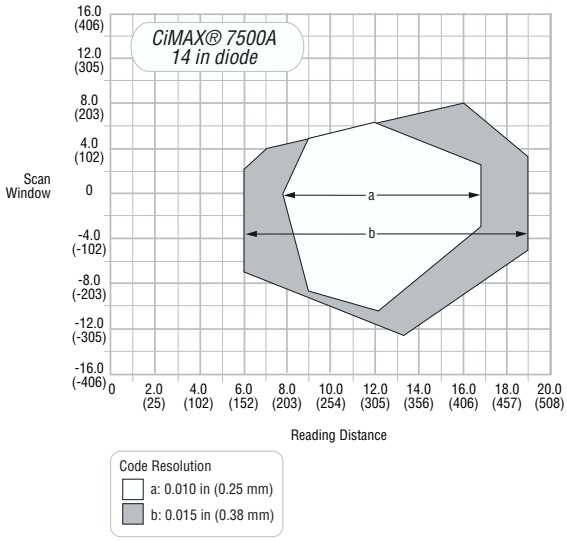

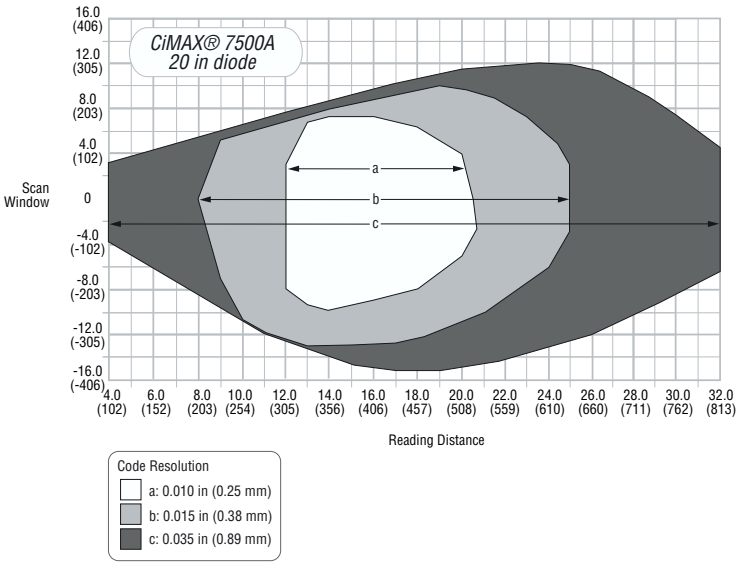

CiMAX® 7500A/7550A/7555A

TECHNICAL SPECIFICATIONS

	7500A	7550A/7555A
Scanning Characteristics		
Aperture Angle*	Maximum 60°	
Scanning Frequency*	1200 Hz	
Light Source*	Visible laser diode (670 nm); CDRH Class II	
Reading Distance (Bar Code Dependent)*	2.0…38.0 in (51…965 mm)	
Maximum Depth of Field	36.0 in (914 mm)	
Resolution*	0.008 in (0.20 mm)	
Bar Code Types		
Bar Code Symbology*	Code 39, Interleaved 2/5, Codabar, Code 93, EAN, UPC, Code 128	
Communications / I/O / Indicators		
Communications	1 asynchronous serial host port RS 422/232; 1 asynchronous serial terminal port RS 232; 1 LAN port with Starnode protocol RS 485; 1 Ethernet port 10 base 2 connection (optional)/SDS/DeviceNet™	
LED Indicators	Setup, Presence, Decode, XMIT/RCV, I/O, Power/Laser On	
Switching Inputs	8 x PNP, opto-decoupled / maximum 30 V DC	
Switching Outputs	8 x PNP, maximum 150 mA / 30 V DC	
Trigger Methods	Sensor input (I/O interface) / Serial (host interface) / Free running	
Setup Diagnostics	Via terminal port using CiMAX® 1400 or PC	
Process Control	32-bit processor with 256 K/1 MB non-volatile RAM, "C" programmable	
Mechanical / Electrical		
Current Consumption	12 V DC ± 5%, 1…5 A, 12 V DC ± 5%, 1A, 5 V DC ± 5%, 1 A (with Ethernet)	
Dimensions (L x W x H)	4.5 x 4.31 x 5.75 in (114 x 109 x 146 mm)	7.0 x 4.31 x 5.75 in (178 x 109 x 146 mm)
Weight	Approx. 3.5 lb (1.6 kg)	Approx. 4.4 lb (2.02 kg)
Housing / Enclosure Rating	Epoxy powder-coated aluminum, NEMA 12 / IP 65 dust and drip proof	
Connectivity	2 9-pin D-Sub connectors (1 male / 1 female), 1 25-pin D-Sub connector (female)	
Environmental		
Ambient Operating Temperature	32…122° F (0…50° C)	
Relative Humidity	5…95%, non-condensing	
Programming	Windows™-based CiMenu32™ Software	

**Actual operational specifications are optimized for each application during factory configuration*

Options

- *CIX® Technology*
- *Ethernet Interface*
- *16-side polygon discrete raster*
- *Interface box with provisions for isolation and connections to Opto-22 style solid state relays*

CiMAX® 7500A/7550A/7555A

MODELS AND PART NUMBERS

	CiMAX 7500A	CiMAX 7550A	CiMAX 7555A
Front Emitting Line Scanner			
Model Configuration*	7500A-A B C D E F	7550A-A B C D E F	7555A-A B C D E F
Part Number	*	*	*

See possible scanner configurations in Part Numbers and Accessories section, pages 128-131.

PINOUTS

9-pin male connector — **Host**

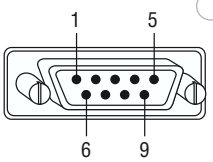

Pin	Signal
1	Host T422+
2	Host RxD
3	Host TxD
4	Setup RxD
5	Ground
6	Host T422-
7	Host R422+
8	Setup TxD
9	Host R422-

9-pin female connector — **Starnode/Setup**

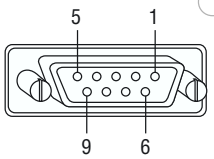

Pin	Signal
1	LAN+ (blue wire)
2	TERM DETECT
3	LAN- (white wire)
4	Ground
5	Frame Ground (cable shield)
6	Ground
7	TERM RxD
8	TERM TxD
9	5 V DC, 500 mA max

25-pin female connector — **I/O**

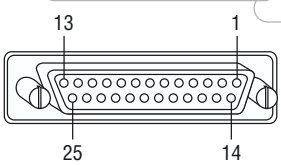

Pin	Signal
1	Input 1 (INZONE PRESENCE)
2	Input 2 (OUTZONE PRESENCE)
3	Input 3 (TACHOMETER)
4	Input 4 (HEIGHT SENSOR 1)
5	Input 5 (HEIGHT SENSOR 2)
6	Input 6 (HEIGHT SENSOR 3)
7	Input 7 (HEIGHT SENSOR 4)
8	Input 8 (HEIGHT SENSOR 5)
9	Output 1 (NO READ)
10	Output 2 (MATCH)
11	Output 3 (NO MATCH)
12	Output 4 (BEEPER)
13	Output 5
14	Output 6
15	Output 7
16	Output 8
17	Laser control
18	Frame Ground
19	12 V DC
20	12 V DC
21	Ground
22	Ground
23	Ground
24	5 V DC
25	5 V DC

CiMAX® 7500A/7550A/7555A

DIMENSIONAL DRAWINGS *Dimensions in inches (mm)*

CiMAX® 7500A Series front emitting scanner

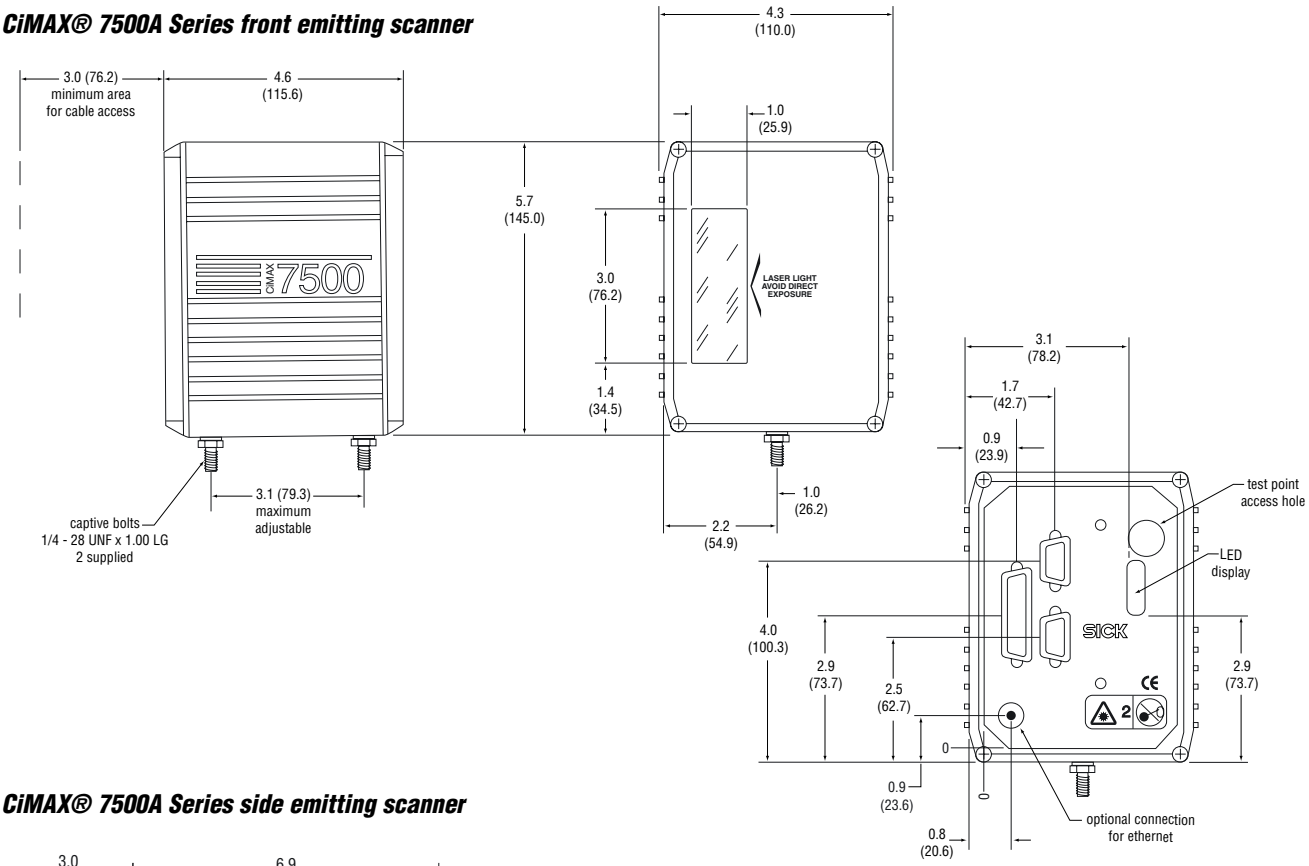

CiMAX® 7500A Series side emitting scanner

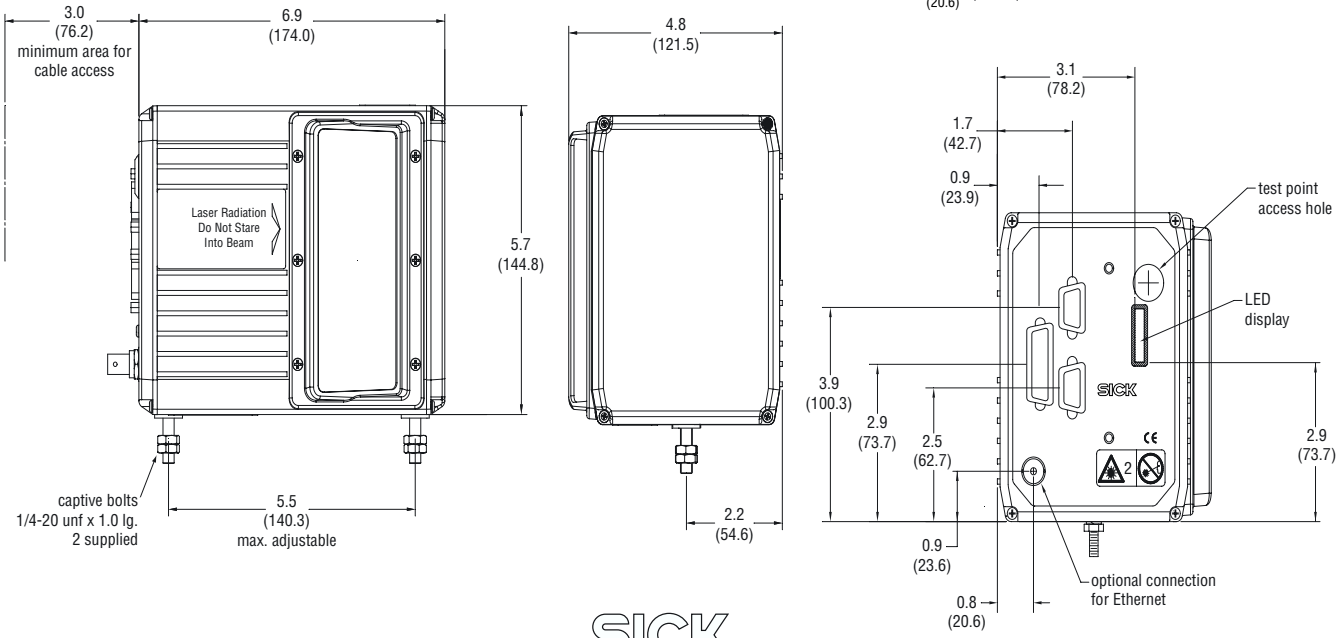

CONNECTION DRAWINGS

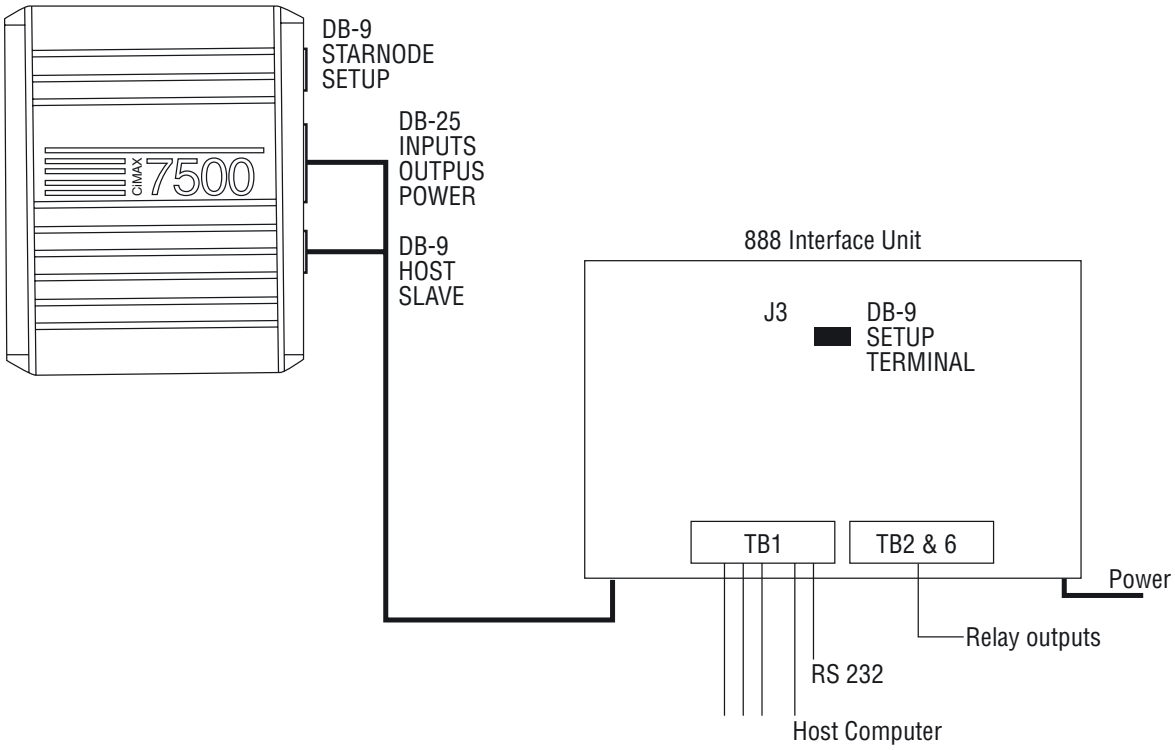

CLV 450

FEATURES

- Extremely large depth of field
- Compact design
- High speed (1000 Hz)
- Dynamic Focus Control
- Integrated CAN Bus network
- SMART technology
- Profile programming- automatic setup
- All parameters user selectable
- Automatic triggering

Model	Optics Type	Reading Range	Bar Code Resolution	Scan Frequency
CLV 450	Standard	6.2…62.9 in (160…1600 mm)	0.01…0.040 in (0.25…1.0 mm)	400…1000 Hz (software selectable)

Scan Options*	Focus Type	Decoding Method**	Housing/Enclosure*
✓ Line	Fixed Focus	✓ Standard	✓ Front Emitting
Raster	Focus Control	PCX	Side Emitting
✓ Oscillating Mirror	✓ Dynamic Focus Control	✓ SMART	✓ Oscillating Mirror
*ordered separately		**user selectable	*ordered separately

READING RANGES *Dimensions in inches (mm)*

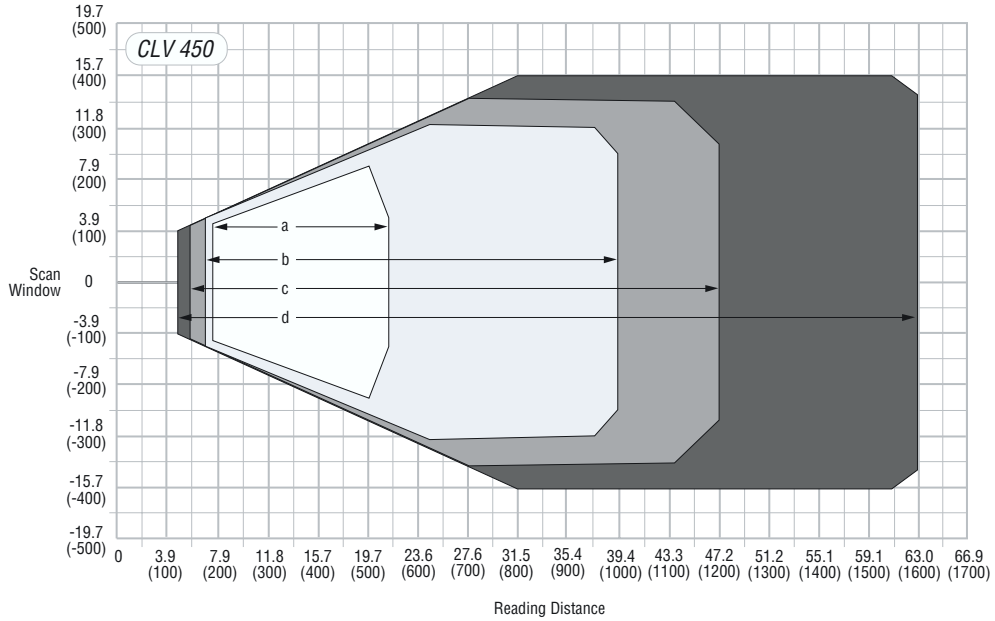

Code Resolution
- a: 0.010 in (0.25 mm)
- b: 0.014 in (0.35 mm)
- c: 0.020 in (0.50 mm)
- d: 0.040 in (1.00 mm)

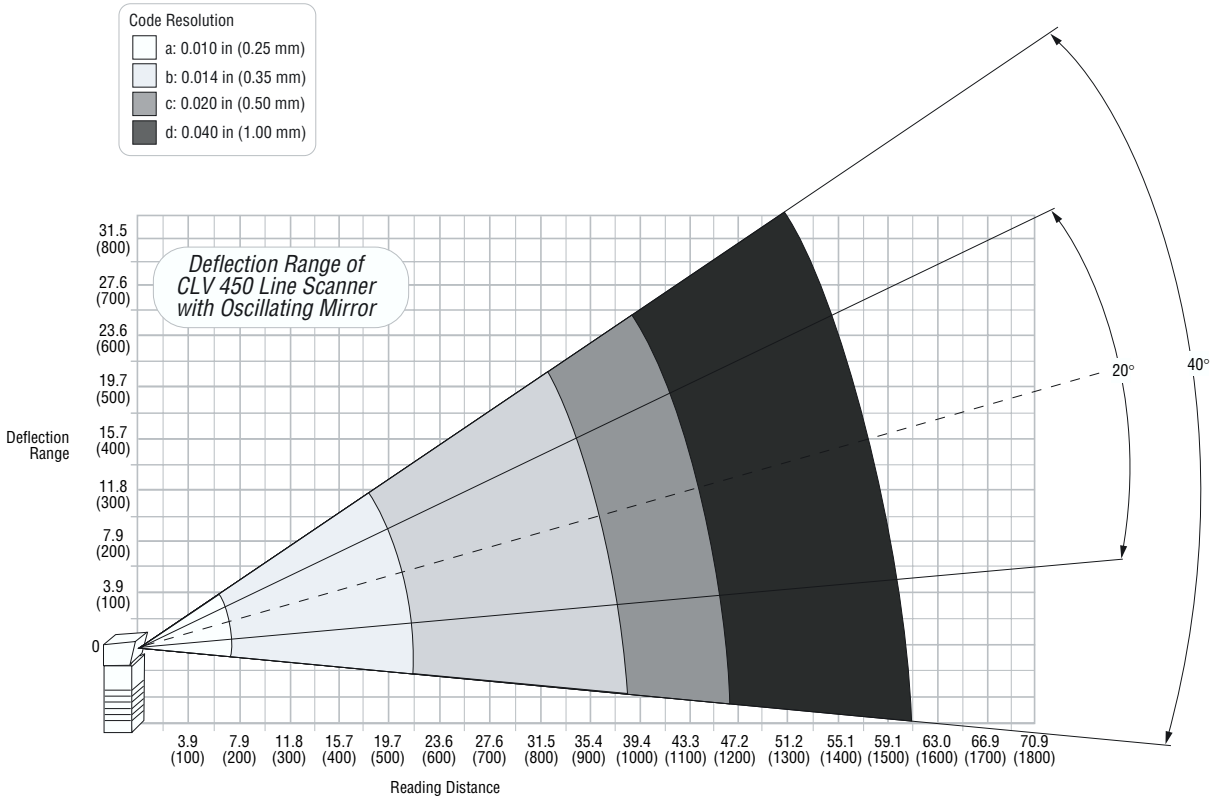

CLV 450

TECHNICAL SPECIFICATIONS

	CLV 450
Scanning Characteristics	
Scanning Method	8-sided polygon mirror wheel
Aperture Angle	Maximum 50°
Scanning Frequency	400…1000 Hz (software selectable)
Light Source	Visible laser diode (650 nm); CDRH Class II
Reading Distance (Bar Code Dependent)	6.2…62.9 in (160…1600 mm)
Resolution	0.010…0.040 in (0.25…1.0 mm)
Bar Code Types	
Bar Code Symbology	Code 39, Interleaved 2/5, Codabar, Code 93, EAN/EAN 128, UPC, Code 128, Pharmacode
Readability	1 to 20 bar codes per reading gate (standard decoder); 1 to 6 (SMART)
Auto Discrimination	8 different symbologies per scan or reading gate
Communications / I/O / Indicators	
Host Interface	RS 232 and RS 422/485, variable data output format (software selectable)
Baud Rate	300…57,600 (software selectable)
Data Format	Data bits, stop bits, parity (software selectable)
Network Configuration	Pass-through; master/slave; RS 485 network; CAN Bus
LED Indicators	Device ready, result, laser on, data
Switching Inputs	2 x PNP, opto-decoupled / maximum 30 V DC
Switching Outputs	2 x PNP, maximum 100 mA
Trigger Methods	Sensor input (I/O interface) / Serial (host interface) / Free running / Reflector polling (automatic)
Mechanical / Electrical	
Supply Voltage	Operating voltage 10…30 V DC
Current Consumption	Line scanner: 250 mA at 24 V DC / 6.0 W; Osc mirror: 300 mA at 24 V DC / 7.2 W
Dimensions	Line scanner: 3.5 x 2.4 x 1.4 in (90 x 60 x 35.7 mm); Osc mirror: 3.9 x 3.6 x 1.5 in (99.8 x 92.2 x 37.8 mm)
Weight	Approx. 18.6 oz (530 g)
Housing / Enclosure Rating	Die cast zinc / IP 65
Connectivity	15-pin male D-Sub high density connector
Environmental	
Ambient Operating Temperature	32…104°F (0…40°C)
Storage Temperature	-4…158°F (-20…70°C)
Vibration	To IEC 68-2-6 test FC
Shock	To IEC 68-2-27 test EA
EMV	To IEC 801
Maximum Relative Humidity	90%, non-condensing
Programming	Windows™-based CLV Setup Software

MODELS AND PART NUMBERS

	CLV 450
Front Emitting Line Scanner	
Model	CLV 450-0010
Part Number	1 018 556
Oscillating Mirror Scanner	
Model	CLV 450-6010
Part Number	1 019 218

PINOUTS

15-pin connector

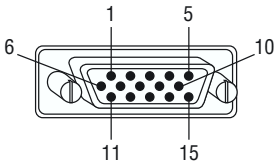

Pin	Signal	Function
1	10…30 V	Supply voltage
2	RxD (Terminal)	Data interface 2 (receiver)
3	TxD (Terminal)	Data interface 2 (transmitter)
4	Sensor 2	Switching input, variable function
5	GND	Ground
6	RD+ (RS 422/485)	Data interface 1 (receiver)
7	RD- (RS 422/485)	Data interface 1 (receiver)
	RxD (RS 232)	-
8	TD+ (RS 422/485)	Data interface 1 (transmitter)
9	TD- (RS 422/485)	Data interface 1 (transmitter)
	TxD (RS 232)	-
10	CAN H	CAN Bus (IN / OUT)
11	CAN L	CAN Bus (IN / OUT)
12	Result 1	Switching output, variable function
13	Result 2	Switching output, variable function
14	Sensor 1	Switching input for ext. reading pulse
15	Sensor GND	Common ground (all inputs)
-	-	Shield

CLV 450

DIMENSIONAL DRAWINGS *Dimensions in inches (mm)*

CLV 450 front emitting scanner

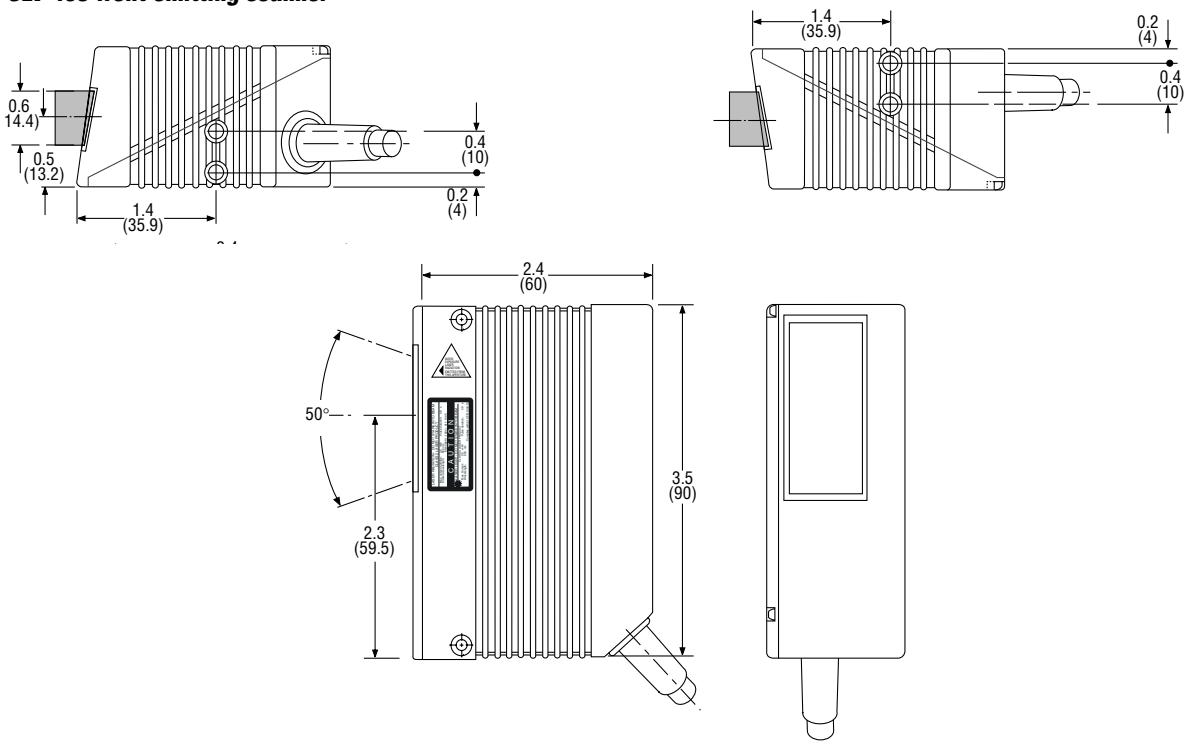

CLV 450 oscillating mirror scanner

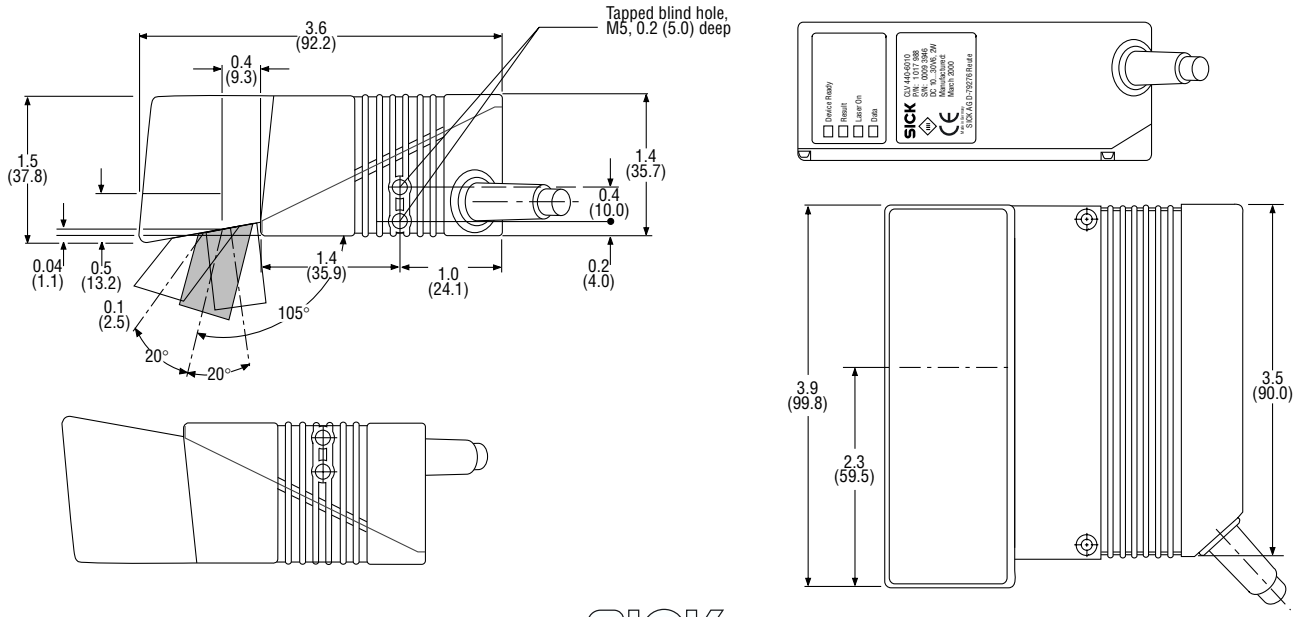

CONNECTION DRAWINGS

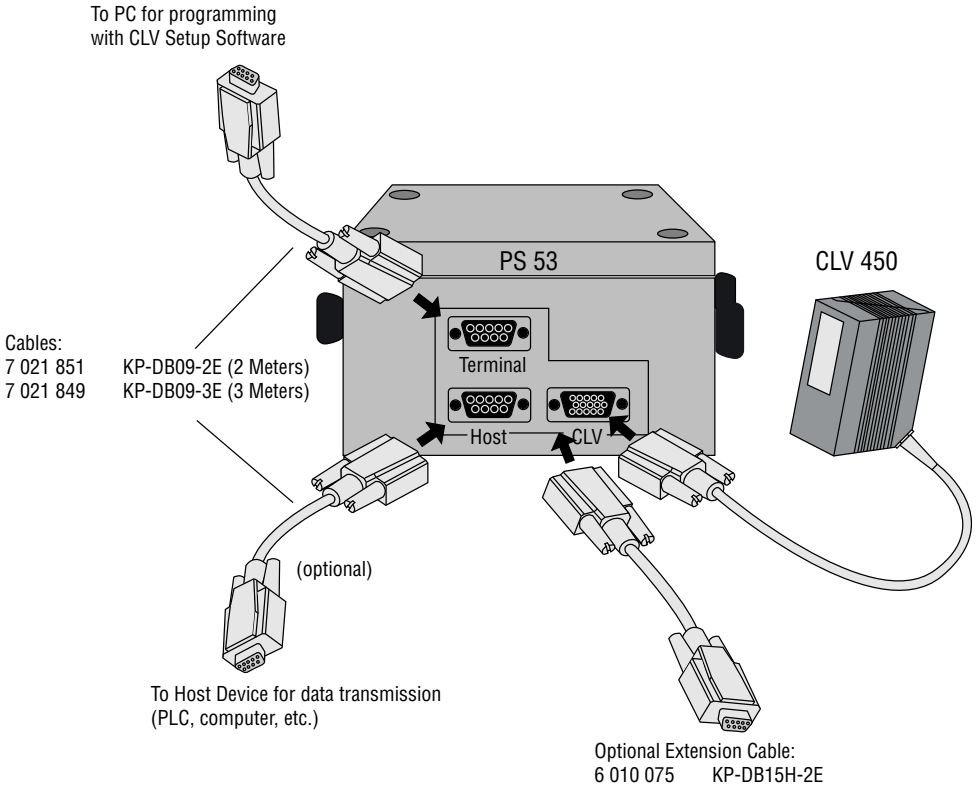

CLV 490

FEATURES

- High speed (1200 Hz)
- Auto Focus Control
- SMART technology
- Extremely large depth of field
- Integrated CAN Bus network
- Optically designed for high tilt angles (45°)
- Automatic scanner setup (cloning module)
- Real time decoding and diagnostics
- All parameters user selectable

Model	Optics Type	Reading Range	Bar Code Resolution	Scan Frequency
CLV 490	Standard	19.7…82.7 in (500…2100 mm)	0.012…0.075 in (0.30…2.0 mm)	600…1200 Hz (software selectable)
CLV 490 LD	Low Density	19.7…86.6 in (500…2200 mm)	0.014…0.047 in (0.35…1.2 mm)	600…1200 Hz (software selectable)
CLV 490 HD	High Density	15.7…63.0 in (400…1600 mm)	0.008…0.016 in (0.2…0.4 mm)	600…1200 Hz (software selectable)

Scan Options*	Focus Type	Decoding Method**	Housing/Enclosure*
✓ Line	Fixed Focus	✓ Standard	✓ Front Emitting
Raster	Focus Control	PCX	Side Emitting
✓ Oscillating Mirror	Dynamic Focus Control	✓ SMART	✓ Oscillating Mirror
*ordered separately	✓ Automatic Focus	**user selectable	*ordered separately

READING RANGES *Dimensions in inches (mm)*

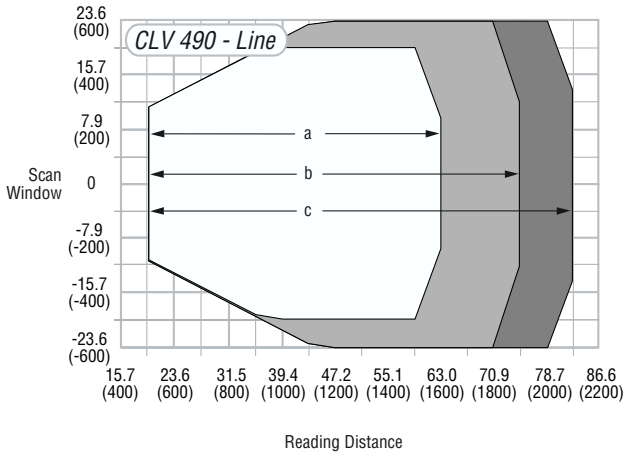

Code Resolution
- a: 0.011 in (0.30 mm)
- b: 0.013 in (0.35 mm)
- c: 0.020 in (0.50 mm)

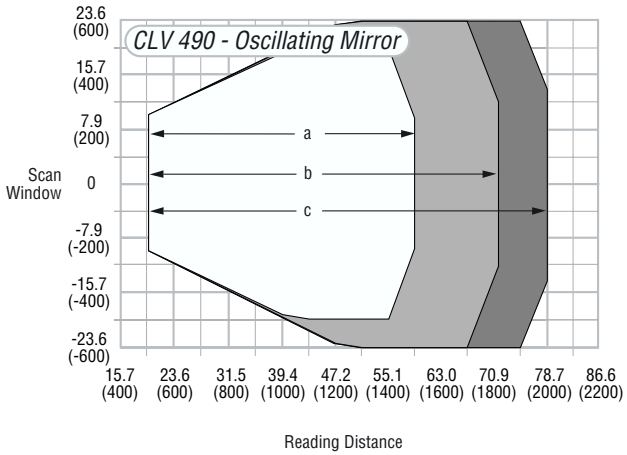

Code Resolution
- a: 0.011 in (0.30 mm)
- b: 0.013 in (0.35 mm)
- c: 0.020 in (0.50 mm)

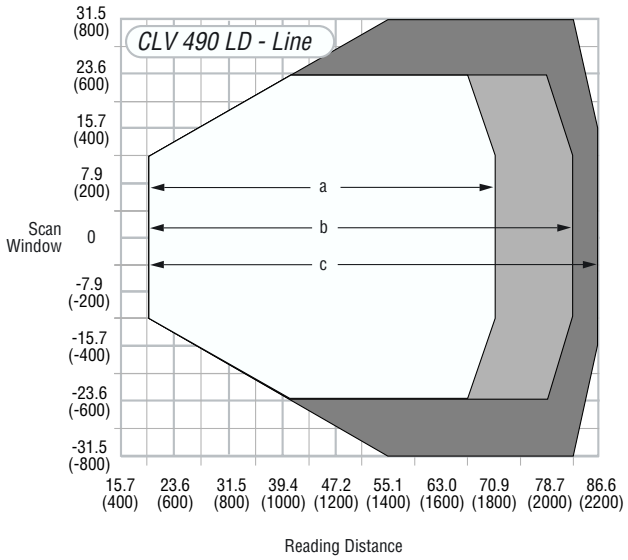

Tilt
- a: -45°…+45°
- b: -30°…+30°
- c: -15°…+15°

Code resolution:
0.020 in (0.5 mm)

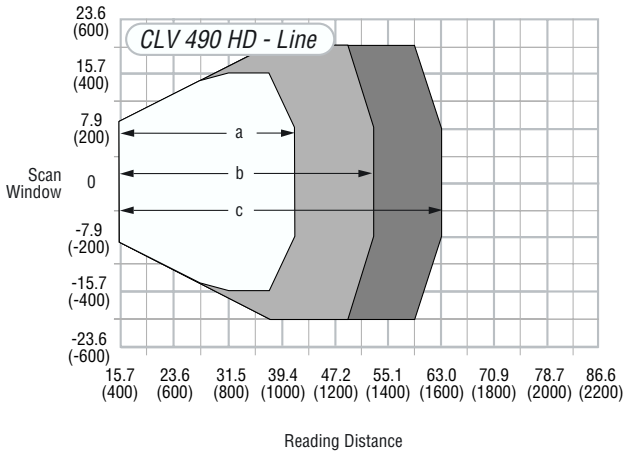

Code Resolution
- a: 0.008 in (0.20 mm)
- b: 0.010 in (0.25 mm)
- c: 0.011 in (0.30 mm)

CLV 490

TECHNICAL SPECIFICATIONS

	CLV 490	CLV 490 LD	CLV 490 HD
Scanning Characteristics			
Scanning Method	8-sided polygon mirror wheel		
Aperture Angle	Line scanner: maximum 60°; osc mirror scanner:maximum 50°		
Scanning Frequency	600…1200 Hz (software selectable)		
Light Source	Visible laser diode (650 nm); CDRH Class II		
Reading Distance (Bar Code Dependent)	19.7…82.7 in (500…2100 mm)	19.7…86.6 in (500…2200 mm)	15.7…63.0 in (400…1600 mm)
Resolution	0.012…0.078 in (0.30…2.0 mm)	0.014…0.047 in (0.35…1.2 mm)	0.008…0.016 in (0.2…0.4 mm)
Bar Code Types			
Bar Code Symbology	Code 39, Interleaved 2/5, Industrial 2/5, Codabar, Code 93, EAN/EAN 128, UPC, Code 128		
Readability	1 to 40 bar codes per reading gate (standard decoder); 1 to 6 (SMART)		
Auto Discrimination	8 different symbologies per reading gate		
Communications / I/O / Indicators			
Host Interface	RS 232 or RS 422/485 variable data output (software selectable)		
Baud Rate	300…57,600 (software selectable)		
Data Format	Data bits, stop bits, parity (software selectable)		
Network Configuration	Pass-through; master/slave; RS 485 network		
LED Indicators	Device ready, result, sensor, data		
Switching Inputs	6 x PNP, opto-decoupled / maximum 30 V DC		
Switching Outputs	4 x PNP, maximum 100 mA / 24 V DC		
Trigger Methods	Sensor input (I/O interface) / Serial (host interface) / Free running		
Mechanical / Electrical			
Supply Voltage	Operating voltage 18…30 V DC		
Current Consumption	375 mA at 24 V DC / typical 9.0 W; maximum 13.0 W		
Dimensions	Line scanner: 4.6 x 4.6 x 3.7 in (117 x 117 x 94 mm); osc mirror scanner: 7.2 x 5.02 x 3.7 in (183 x 127.5 x 94 mm)		
Weight	Approx. 3.3 lb (1.5 kg); with osc mirror: approx. 4.9 lb (2.2 kg)		
Housing / Enclosure Rating	Die cast aluminum / IP 65		
Connectivity	2 15-pin D-Sub high density connectors (1 male / 1 female)		
Environmental			
Ambient Operating Temperature	32…104°F (0…40°C)		
Storage Temperature	-4…158°F (-20…70°C)		
Vibration	To IEC 68-2-6 test FC		
Shock	To IEC 68-2-27 test EA		
EMV	To IEC 801		
Maximum Relative Humidity	90%, non-condensing		
Programming	Windows™-based CLV Setup Software		

MODELS AND PART NUMBERS

	CLV 490	CLV 490 (with heater)	CLV 490 Low Density	CLV 490 LD (with heater)	CLV 490 High Density
Line Scanner					
Model	CLV 490-0010	CLV 490-0011	CLV 490-6010	CLV 490-6011	CLV 490-2010
Part Number	1 016 958	1 016 960	1 018 872	1 019 095	1 019 311
Oscillating Mirror Scanner					
Model	CLV 490-1010	CLV 490-1011	CLV 490-7010	CLV 490-7011	CLV 490-3010
Part Number	1 016 959	1 016 961	1 019 094	1 019 096	1 019 313

PINOUTS

Term/Host Port

15-pin male connector

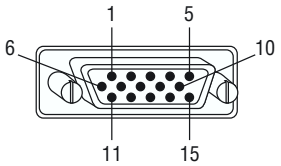

Pin	Terminal/ Host Port	Host Communications RS 232	Host Communications RS 422/485
1	24 V DC	-	-
2	RxD	-	-
3	TxD	-	-
4	-	-	Term 422
5	GND	GND	GND
6	-	-	RD+
7	-	RxD	RD-
8	-	-	TD+
9	-	TxD	TD-
10	CAN H	-	-
11	BUS RT-	-	-
12	BUS RT+	-	-
13	BUS R-	-	-
14	BUS R+	-	-
15	CAN L	-	-

I/O Port

15-pin female connector

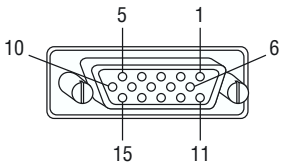

Pin	Signal	Function
1	24 V DC	Supply voltage
2	IN 1	Switching input (Focus Control)
3	Sensor Input	Switching input (Trigger)
4	Result 1	Switching output
5	GND	Ground
6	IN 0	Switching input (Focus Control)
7	IN 2	Switching input (Focus Control)
8	Result 2	Switching output
9	IN GND	Common ground
10	Result 3	Switching output
11	IN 3	Switching input (Focus Control)
12	IN 4	Switching input (Focus Control)
13	I2C SDA	I2C Bus
14	I2C SCL	I2C Bus
15	Result 4	Switching output

CLV 490

DIMENSIONAL DRAWINGS *Dimensions in inches (mm)*

CLV 490 line scanner

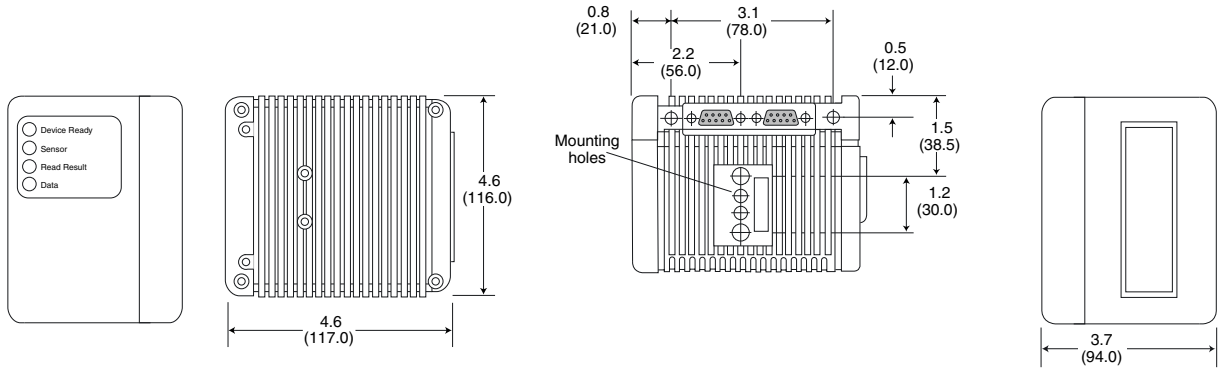

CLV 490 oscillating mirror scanner

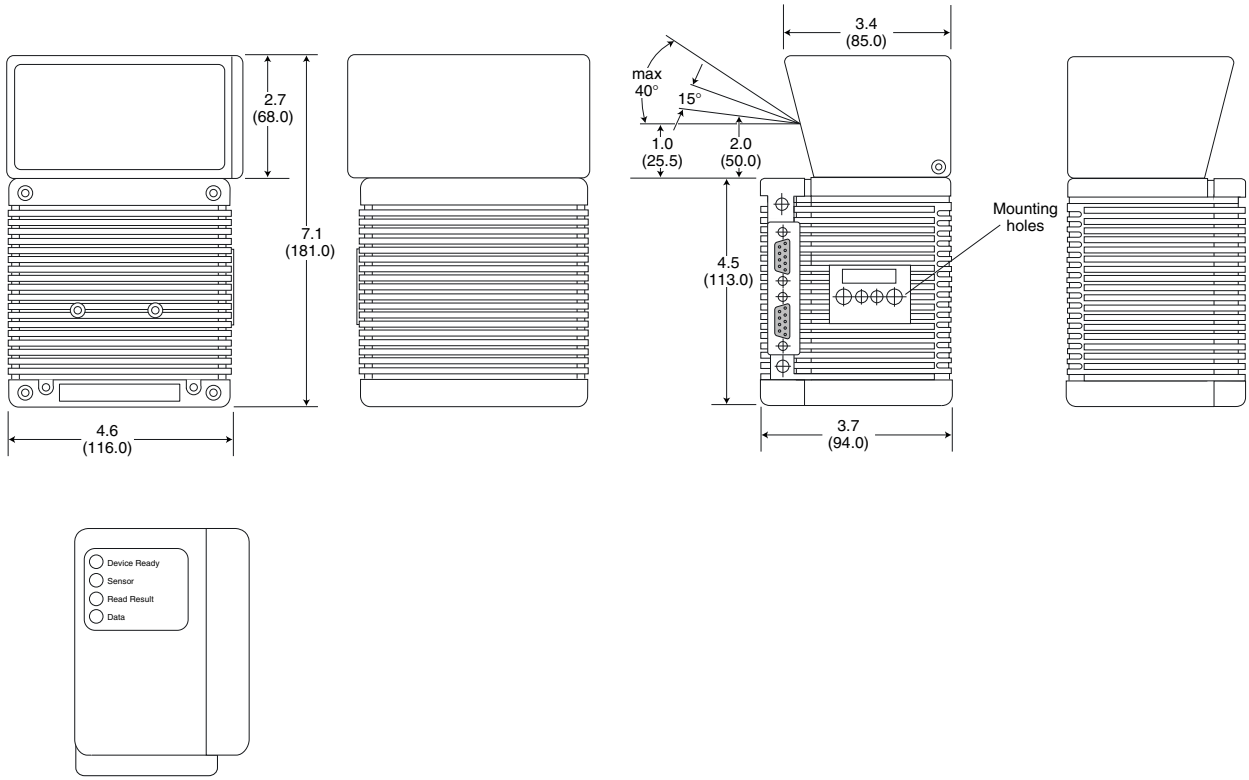

CONNECTION DRAWINGS

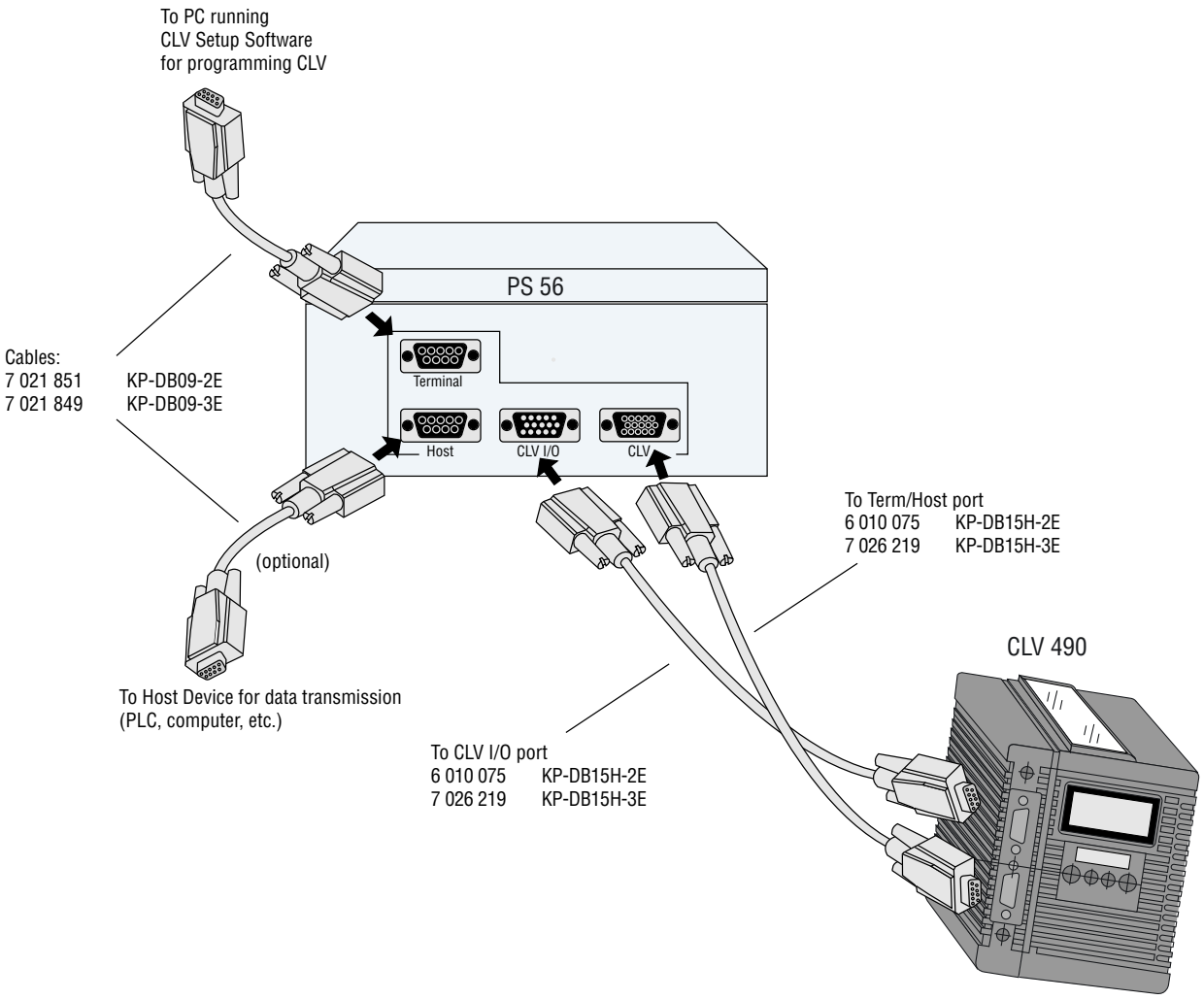

Setup Software

CLV Setup Software

FEATURES

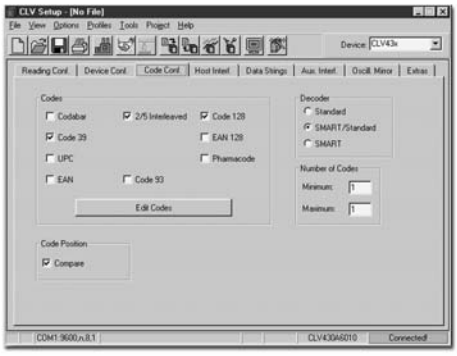

- Unique scanner configuration software
- Windows™-based, user-friendly format
- Stand-alone operation
- Direct file transfer to/from all CLV scanners
- Long term file storage on disk

	CLV Setup Software
Part Number	2 020 455 (diskette); 7 026 126 (CD)
Computer	Minimum IBM 486, or true 486 IBM compatible
Hard Disk Space	10 MB of available disk space
Disk Drive	One 3.5" high density drive / one CD ROM drive
Memory Requirements	Recommended 8 MB RAM
System Software	Windows™ 95, 98, NT or 2000
Mouse	Optional but recommended
CLV Scanner Interface / Compatibility	CLV 210, 212, 214, 220, 230, 250, 265, 280, 295, 410, 412, 414, 420, 421, 422, 430, 431, 432, 440, 442, 450, 490, CLX 490, ICR 850 or OPS 400

CLP Setup Software

FEATURES

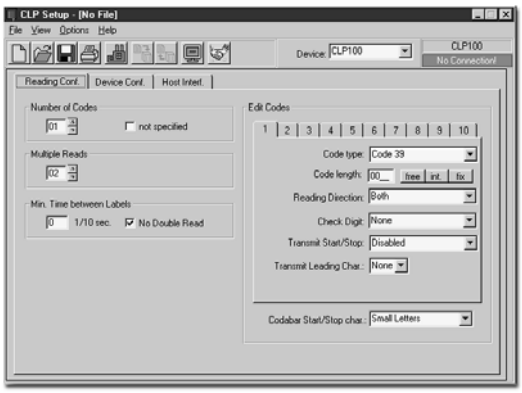

- Unique scanner configuration software
- Windows™-based, user-friendly format
- Stand-alone operation
- Direct file transfer to/from CLP scanner
- Long term file storage on disk

	CLP Setup Software
Part Number	2 021 674
Computer	Minimum IBM 486, or true 486 IBM compatible
Hard Disk Space	5 MB of available disk space
Disk Drive	One 3.5" high density drive / one CD ROM drive
Memory Requirements	Recommended 8 MB RAM
System Software	Windows™ 95, 98, NT or 2000
Mouse	Optional but recommended
CLV Scanner Interface / Compatibility	CLP 100

CiMenu32™ Software

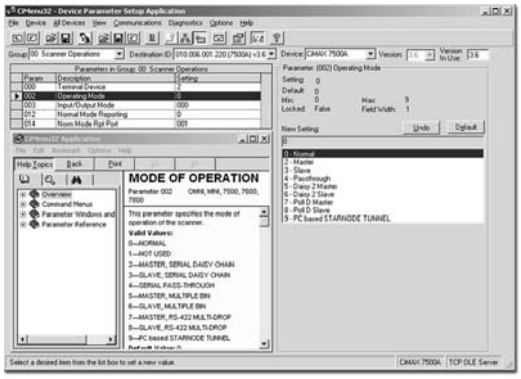

FEATURES

- Unique scanner configuration software
- Supports serial, Starnode and Ethernet communications
- Windows™-based, user-friendly format
- Terminal emulator built in
- Easily change a single parameter on multiple devices
- Compare scanner configurations
- Easily restore from one device to another
- Automated Help display

	CiMenu32™ Software
Computer	Pentium™-class CPU
System Software	Windows™ 95, 98, NT or 2000
Scanner Interface / Compatibility	CiMAX® 7500/7500A/7600 Series, OMNI-L Slim X, CiMAX® 6000, Scanstar 2421, OMNI-2000, OMNI-2110, MHI-2000

INTRODUCTION

SICK Auto Ident, Inc. offers the industry's broadest mix of laser-based omni scanning solutions for sorting and tracking bar coded items in manufacturing, retail distribution, parcel sortation and airline baggage handling applications. Choose from fully integrated scanners for single scan point applications to powerful and sophisticated high-volume tunnel scanning solutions for multi-sided reading applications.

All SICK scanning solutions are designed for easy installation and service and feature advanced optical and communication capabilities. High scan rates, Auto Focus and sophisticated reconstruction software ensure aggressive decoding on the toughest to read codes. User-friendly Windows™-based setup software gets you up and running quickly. All systems are supported by an experienced applications team that can help you integrate our products into today's latest material handling and controls systems.

CLX 490
Pgs. 68-73

The CLX 490 is the most compact, industrial omni directional scanner on the market. It incorporates Auto Focus Control, SMART technology, a high scan rate and package tracking into one unit. The maximum scanning frequency is 1200 Hz for a complete x-pattern. The CLX 490 is ideal for conveyor widths up to 16 in (400 mm) and conveyor speeds up to 400 ft/m (2 m/s).

CLX 490 Applications:

- Conveyor sorting systems
- Package tracking
- Automotive assembly

OPS 400
Pgs. 74-75

The OPS 400 is a cost effective, fully integrated omni scanning system designed for single point scanning applications. It provides aggressive scanning with real time Auto Focus, a 1200 Hz scan rate, and SMART technology to read poorly printed or damaged labels. The OPS 400 also features integrated tracking and requires no supplementary components to detect object distances. Choose from low-, standard-, or high-density models that cover up to 32 in (800 mm) wide conveyors with up to 59 in (1499 mm) depth of field.

OPS 400 Applications:

- Package sorting
- Bar code label tracking

OMNI-L Slim X
Pgs. 76-77

The OMNI-L Slim X is a fixed position omni directional laser scanner for industrial applications requiring a wide depth of field and conveyor coverage and the ability to reliably read bar codes presented at any angle. Its unique optical design makes it the ideal solution for automobile tire manufacturing applications. It is available with 1 or 2 X-pattern coverage and can be configured locally.

OMNI-L Slim X Applications:

- Automobile tire manufacturing tracking & sorting
- Package handling
- Bar code label tracking
- Complex sortation

OMNI-2110
Pgs. 78-79

The OMNI-2110 is a high performance, omni directional bar code laser scanner designed for item sorting and tracking applications that require a large depth of field and conveyor coverage up to 40 in (1016 mm) wide. It is designed specifically for use on high speed belt, tilt-tray and roller conveyors. Advanced optical performance for low-, medium- and high-density codes, real time diagnostics, reconstruction software, and rugged housing make the OMNI-2110 perfectly suited for the most sophisticated applications. "C" programmable local I/O and communications provides additional system flexibility and eliminates the need for control PLCs to reduce network operating overhead.

OMNI-2110 Applications:

- Parcel and general merchandise distribution
- High speed sortation, command and control systems
- eCommerce distribution
- Packaging and order fulfillment

OMNI DIRECTIONAL & TUNNEL SCANNING SYSTEMS

OPS 290/490
Pgs. 80-83

The modular concept of the OPS 290 and OPS 490 allows custom adaptation to your omni directional application. This customization of the reading gate allows bar codes to be read in any orientation. It uses high end scanners, real time Auto Focus function with a large depth of field and narrow module widths. It also has SMART code recognition and high operational reliability. All OPS systems include a tracking module to accurately assign the bar code to the package when the package gaps are small.

OPS 290/490 Applications:

- Package sorting
- Bar code label tracking
- Conveyor systems

Advanced OPS & Tunnel Scanning Systems
Pgs. 84-85

Not every tunnel application is created equal, so SICK's modular tunnel concept allows individual adaptation to any application. Tunnel scanning solutions are configured using our most advanced scanning and control products. Whether your application requires ultra wide coverage on a single plane or multi-sided reading for every package side, SICK has a solution that will meet your needs reliably and accurately. We use a combination of high performance CLV 490 high-end line scanners and the maximum-performance OMNI-2110 omni scanner to create the most effective solution for your needs.

Tunnel Scanning Applications:

- Retail distribution
- Parcel sortation

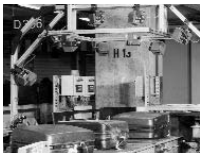

ALIS - Airport Luggage Identification System
Pgs. 86-87

ALIS (Airport Luggage Identification System) is a flexible bar code scanning system that is specially designed to identify IATA bar codes on items of luggage. Even if the bar codes are twisted, dirty or bent, the high performance capabilities of the CLV 490 bar code scanner and optimum number of scanners mean that reading rates of 97% and higher are possible. The ALIS can be used with tray sorters or belt conveyors. The scanner parameters are stored in the connecting plug and the quick release locks enable you to replace the devices quickly.

ALIS Applications:

- Airline baggage handling

VMS - Volume Measurement Systems
Pgs. 88-89

The VMS is a stand alone system or a component of tunnel systems used for determining the individual item dimension or volume data of parcels and freight. It is also the ideal solution for load optimization and for reducing charge-backs.

VMS Applications:

- Retail distribution
- Parcel sortation
- Load optimization

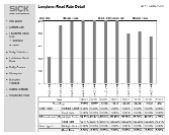

RDT 400 - Remote Diagnostics Tool
Pgs. 90-91

RDT 400 is a powerful graphics visualization tool for monitoring and controlling any of SICK's OPS tunnels and ALIS baggage handling systems. It allows you to check individual scanner and total system performance and view data remotely via any network or the internet.

CLX 490

FEATURES

- Compact omni directional bar code scanner
- Smallest unit in its class
- Auto Focus Control
- SMART technology
- Integrated tracking function
- Extremely large depth of field
- High speed (1200 Hz)
- Parameters stored in plug and quick-release brackets allow easy scanner replacements

Model	Optics Type	Reading Range	Bar Code Resolution	Scan Frequency
CLX 490	Standard	23.6…68.9 in (600…1750 mm)	0.011…0.020 in (0.30…0.50 mm)	600…1200 Hz (software selectable)

Scan Options*	Focus Type	Decoding Method**	Housing/Enclosure*
✓ Line (x-pattern)	Fixed Focus	Standard	✓ Front Emitting
Raster	Focus Control	PCX	Side Emitting
Oscillating Mirror	Dynamic Focus Control	✓ SMART	Oscillating Mirror
*ordered separately	✓ Automatic Focus	**user selectable	*ordered separately

READING RANGES *Dimensions in inches (mm)*

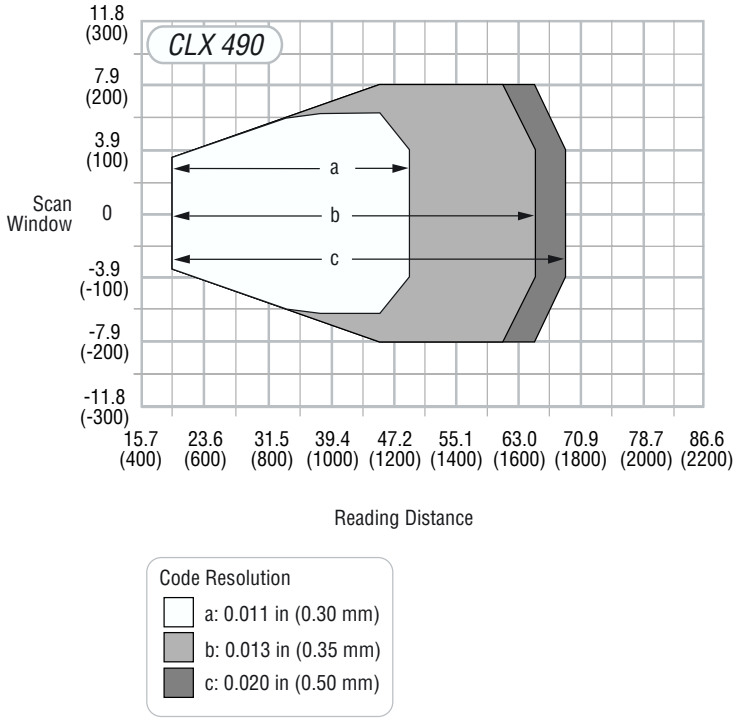

CLX 490

TECHNICAL SPECIFICATIONS

	CLX 490
Scanning Characteristics	
Scanning Method	8-sided polygon mirror wheel
Aperture Angle	Maximum 60°
Scanning Frequency	600…1200 Hz (software selectable)
Coverage for 0.014…0.02 in (0.35…0.5 mm)	
• Width	15.7 in (400 mm)
• Height	31.5 in (800 mm)
• Speed	590 ft/min (180 m/min)
Light Source	Visible laser diode (650 nm); CDRH Class II
Reading Distance (Bar Code Dependent)	23.6…68.9 in (500…1750 mm)
Resolution	0.011…0.020 in (0.30…0.50 mm)
Bar Code Types	
Bar Code Symbology	Code 39, Interleaved 2/5, Industrial 2/5, Codabar, Code 93, EAN/EAN 128, UPC, Code 128
Readability	1 to 12 bar codes per reading gate (standard decoder); 1 to 5 (SMART)
Auto Discrimination	8 different symbologies per reading gate
Communications / I/O / Indicators	
Host Interface	RS 232 or RS 422/485 variable data output (software selectable)
Baud Rate	300…57,600 (software selectable)
Data Format	Data bits, stop bits, parity (software selectable)
Network Configuration	Pass-through; master/slave; RS 485 network, CAN Bus network
LED Indicators	Device ready, result, sensor, data
Switching Inputs	6 x PNP, opto-decoupled / maximum 30 V DC
Switching Outputs	4 x PNP, maximum 100 mA / 24 V DC
Trigger Methods	Sensor input (I/O interface) / Serial (host interface) / Free running
Mechanical / Electrical	
Supply Voltage	Operating voltage 18…30 V DC
Current Consumption	375 mA at 24 V DC / 9.0 W; maximum 16.0 W
Dimensions	6.0 x 3.6 x 8.0 in (152.6 x 93.5 x 208 mm)
Weight	Approx. 4.9 lb (2.2 kg)
Housing / Enclosure Rating	Die cast aluminum / IP 65
Connectivity	2 15-pin D-Sub high density connectors (1 male/1 female)
Environmental	
Ambient Operating Temperature	32…104°F (0…40°C)
Storage Temperature	-4…158°F (-20…70°C)
Vibration	To IEC 68-2-6 test FC
Shock	To IEC 68-2-27 test EA
EMV	To IEC 801
Maximum Relative Humidity	90%, non-condensing
Programming	Windows™-based CLV Setup Software

MODELS AND PART NUMBERS

	CLX 490
Omni Directional Scanner	
Model	CLX 490-0010
Part Number	1 019 318

PINOUTS

Term/Host Port

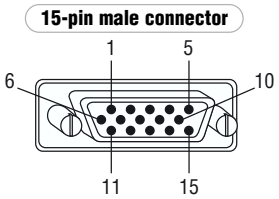

Pin	Terminal/ Host Port	Host Communications	
		RS 232	RS 422/485
1	24 V DC	-	-
2	RxD	-	-
3	TxD	-	-
4	-	-	Term 422
5	GND	GND	GND
6	-	-	RD+
7	-	RxD	RD-
8	-	-	TD+
9	-	TxD	TD-
10	CAN H	-	-
11	BUS RT-	-	-
12	BUS RT+	-	-
13	BUS R-	-	-
14	BUS R+	-	-
15	CAN L	-	-

I/O Port

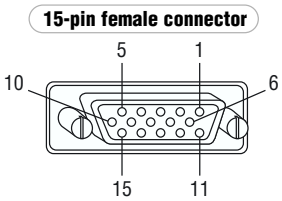

Pin	Signal	Function
1	24 V DC	Supply voltage
2	IN 1	Switching input (Focus Control)
3	Sensor Input	Switching input (Trigger)
4	Result 1	Switching output
5	GND	Ground
6	IN 0	Switching input (Focus Control)
7	IN 2	Switching input (Focus Control)
8	Result 2	Switching output
9	IN GND	Common ground
10	Result 3	Switching output
11	IN 3	Switching input (Focus Control)
12	IN 4	Switching input (Focus Control)
13	I2C SDA	I2C Bus
14	I2C SCL	I2C Bus
15	Result 4	Switching output

CLX 490

DIMENSIONAL DRAWINGS *Dimensions in inches (mm)*

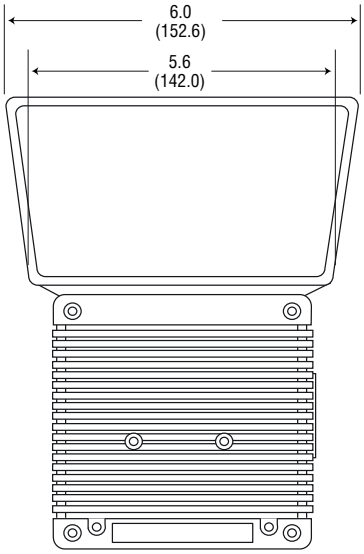

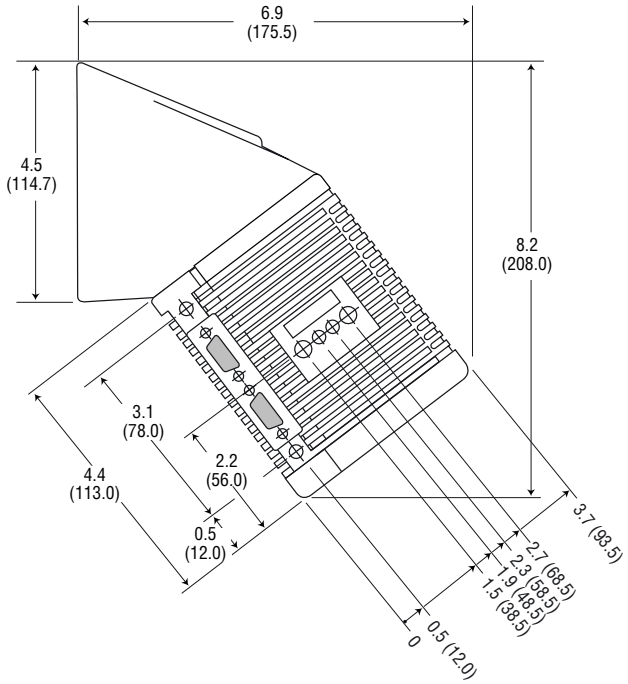

CONNECTION DRAWINGS

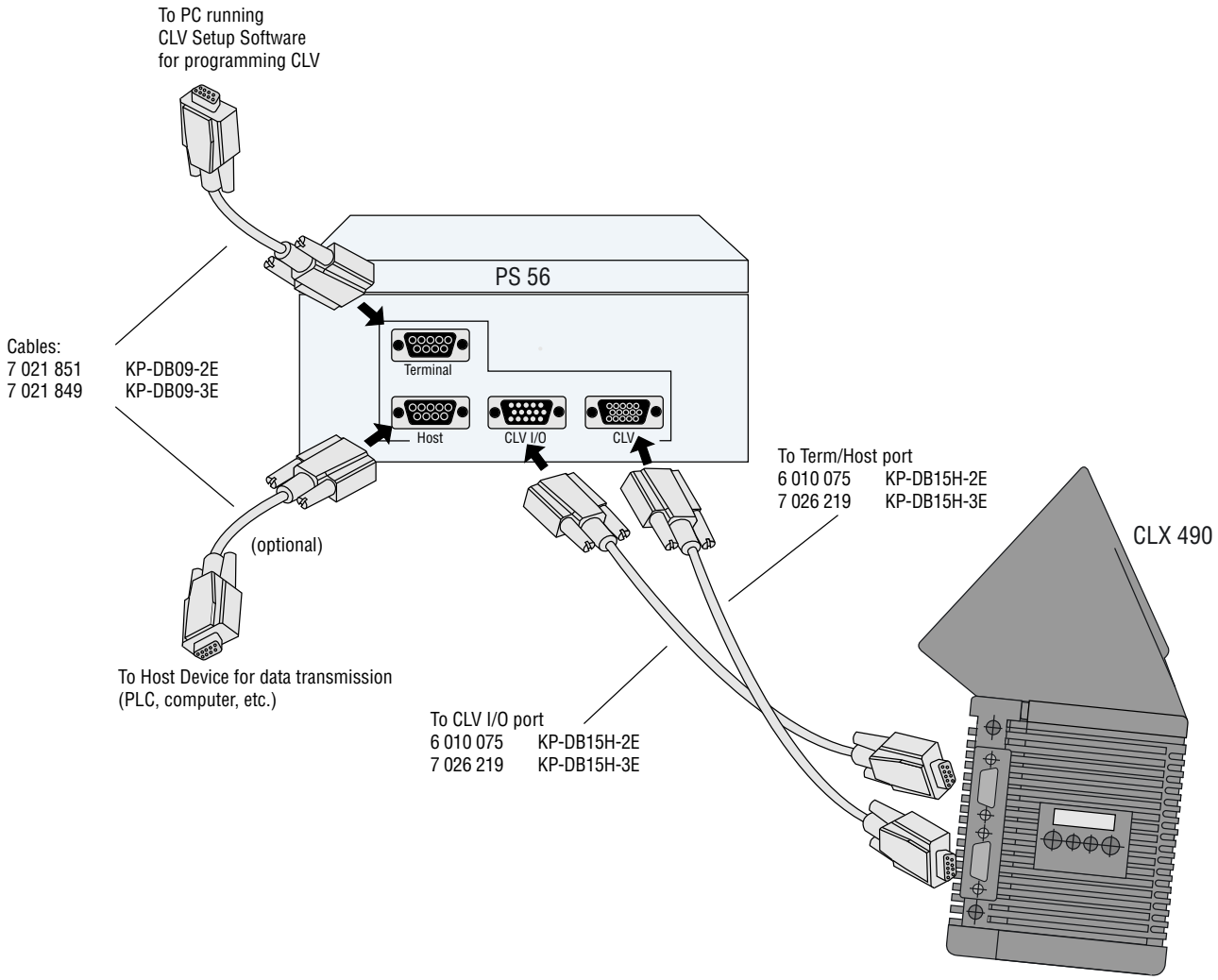

OPS 400

FEATURES

- Compact integrated housing
- Plug and play (common CLV setup platform)
- High scan rate (up to 1200 Hz)
- Real time Auto Focus Control
- Available in standard, high- and low-density models
- SMART code recognition
- Integrated tracking

READING RANGES *Dimensions in inches (mm)*

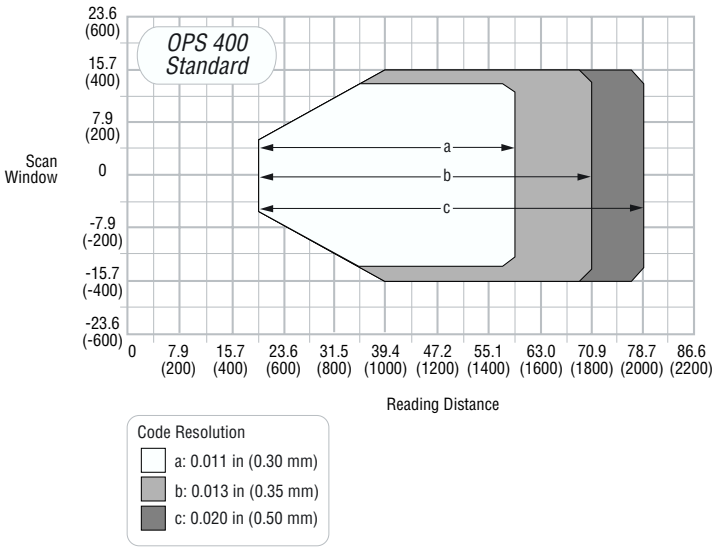

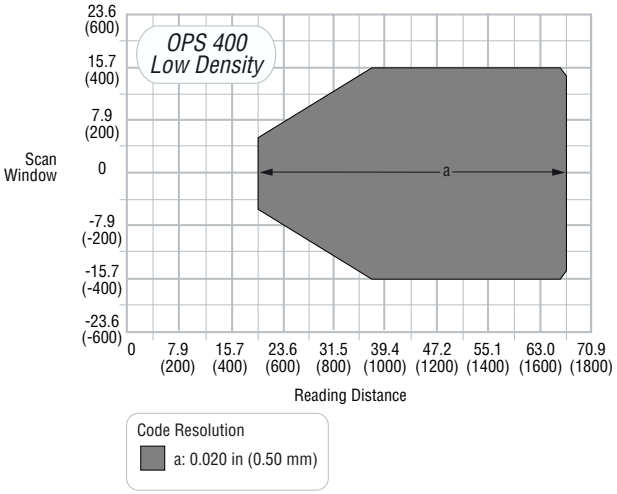

TECHNICAL SPECIFICATIONS

	OPS 400
Scanner Design	X-scanner (2 lines at 90° to one another)
Light Source	Laser diode, red light (650 nm)
Laser Class	Class II (EN 60925-1)
Ambient Light Compatibility	2000 lx (on bar code)
Scanning Frequency	600…1200 Hz
Path Width Covered	Standard and low density: 31.5 in (800 mm); high density: 27.6 in (700 mm)
Operation and Parameterization	With Windows™-based CLV Setup Software or command strings
Indicators	26 LED status and function indicators
Data Interfaces	Host: RS 232, RS 422/485; Terminal: RS 232
Switching Inputs / Switching Outputs	16 x IN / 4 x OUT / 1 x OUT relay
Electrical Connection	2 x 9-pin D-Sub plugs/terminals
Operating Voltage	85…264 V AC (100…240 V AC +10%/-15%)
Power Consumption	Typical 30 W, maximum 70 W
Housing	Sheet steel with aluminum top and base
Enclosure Rating	IP 54 / optics IP 65 (DIN 40 050)
Protection Class	Class III (VDE 0106)
EMC Test	IEC 801
Weight	23.6 lb (10.7 kg)
Operating Temperature	32…104°F (0…40°C)
Storage Temperature	-4…158°F (-20…+70°C)

DIMENSIONAL DRAWINGS *Dimensions in inches (mm)*

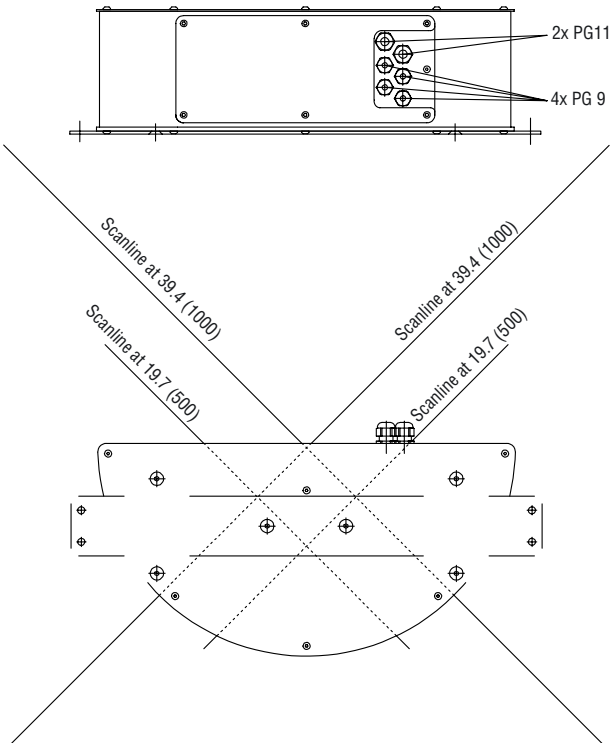

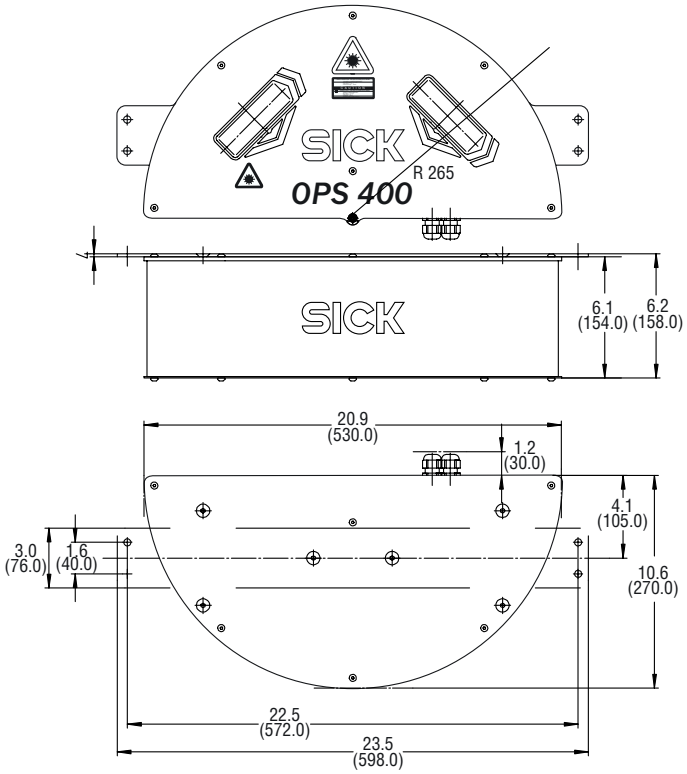

OMNI-L Slim X

FEATURES

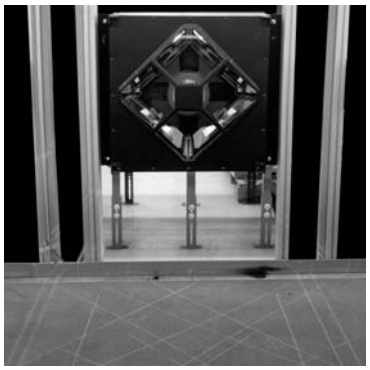

- Maximum performance omni directional scanner
- Designed for tire manufacturing applications
- Advanced diagnostics with real time monitoring of label quality, scanner and network operation
- Integrated tracking for maximum sorting control
- Factory pre-configured and tested for each application
- "C" programmable local I/O and communications to minimize network operating overhead
- CIX® (Code Information eXtraction) Technology
- Advanced optical technology for reading low aspect codes

DIMENSIONAL DRAWINGS *Dimensions in inches (mm)*

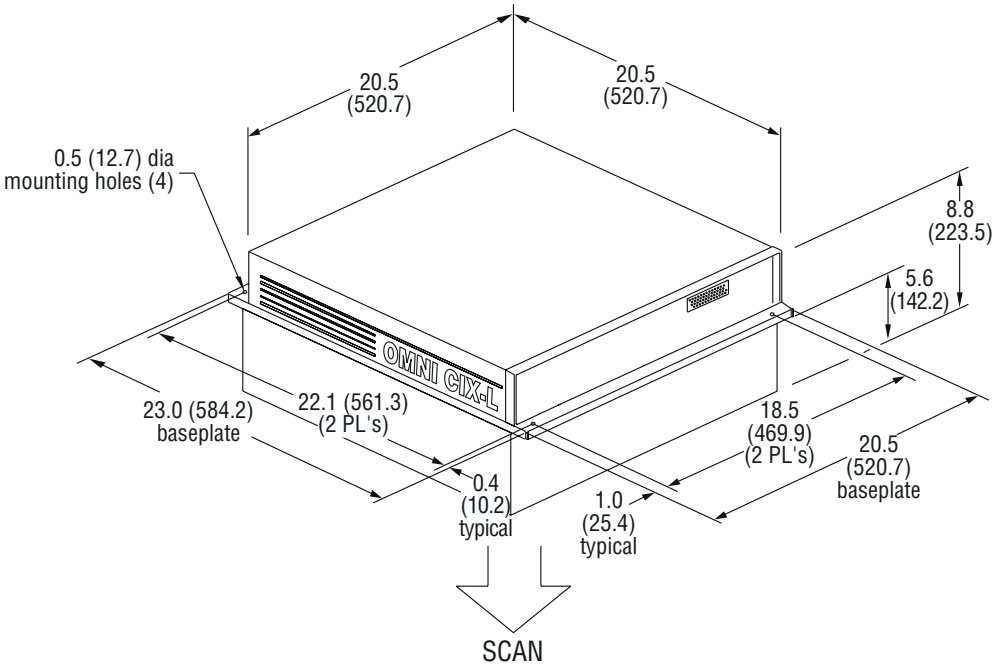

TECHNICAL SPECIFICATIONS

	OMNI-L Slim X
Scanning Characteristics	
Scanning Method	Polygon mirror wheel
Scanning Frequency	525 Hz (up to 4200 scans total)
Maximum Conveyor Speed	120 ft/min (37 m/min)
Light Source	Visible laser diodes (635 nm); CDRH Class L
Reading Area (Bar Code Dependent)	Up to 30.0 in (852 mm) with 10.0 in (254 mm) depth of field on a typical 0.020 in (0.50 mm) bar code
Resolution	0.010 in (0.25 mm)
Bar Code Types	
Bar Code Symbology	Code 39, Interleaved 2/5, Codabar, EAN, UPC, Code 128
Label Types	Thermal, plastic coated, any surface
Communications / I/O / Indicators	
Host Interface	RS 232 or RS 422 Host, RS 232 Set up, RS 232 Slave
Network Configuration	RS 485 Starnode LAN, optional Ethernet TCP/IP DeviceNet, SDS
LED Indicators	10 discrete LEDs for status monitoring, optional CiMAX® terminal with 80-character display
Switching Inputs	Up to 8 optically isolated logic inputs for photocells, height sensing and tachometer
Switching Outputs	Up to 8 open collector outputs for light trees, diverters and alarms (relays optional)
Trigger Methods	Sensor input (I/O interface) / Serial (host interface) / Free running
Diagnostics	Accessible via set up port, network ports, optional modem or via the internet
Display	10 discrete LED's for status monitoring, optional CiMAX® terminal with 80-character display
Process Control	"C" programmable I/O and communications with optional 1 MB non-volatile RAM
Mechanical / Electrical	
Supply Voltage	115/230 V AC ± 15%
Current Consumption	115/230 V AC ± 15%, 50/60 Hz, 1.5/0.08 amps
Dimensions (L x W x H)	Scanner: 23.0 x 20.5 x 8.8 in (585 x 521 x 224 mm); Interface box: 13.2 x 13.2 x 3.0 in (335 x 335 x 76 mm)
Weight	Scanner: 53 lb (24 kg); Interface box: 13.5 lb (6 kg)
Housing / Enclosure Rating	Painted steel, NEMA 12 / IP 51
Environmental	
Ambient Operating Temperature	32…122° F (0…50° C)
Maximum Relative Humidity	5…95%, non-condensing
Programming	Via set up part, using CiMAX 1400 terminal of PC with terminal emulation or CiMenu program

OMNI-2110

FEATURES

- Single polygon configured for one or two “x” patterns depending on application requirements
- High scan rate (up to 550 Hz) for conveyor speeds up to 600 ft/min
- Advanced diagnostics with real time monitoring of label quality, scanner and network operation
- “C” programmable local I/O and communications
- CIX® (Code Information eXtraction) Technology
- Side-by-side tilt tray capability
- Dynamic depth of field

READING RANGES *Dimensions in inches (mm)*

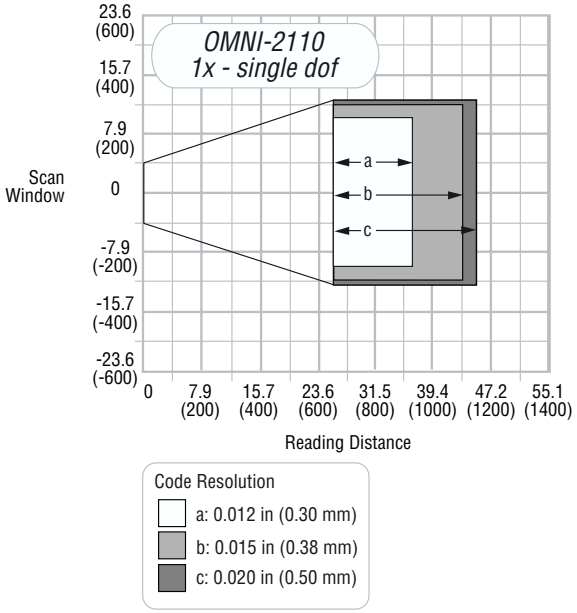

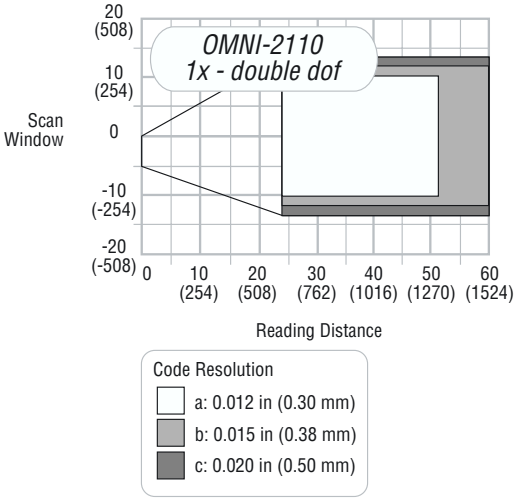

READING RANGES *Dimensions in inches (mm)*

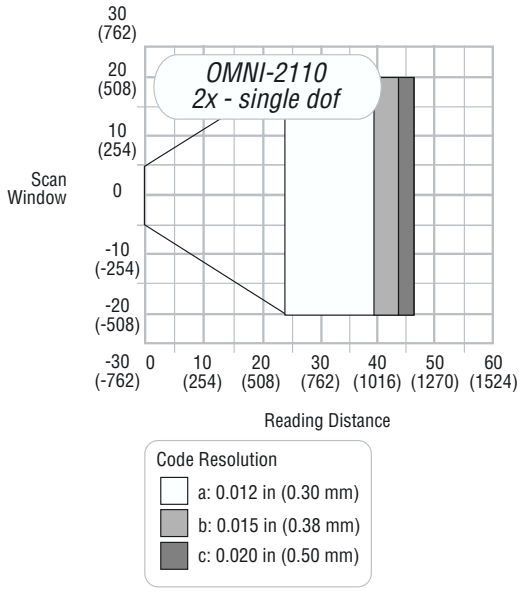

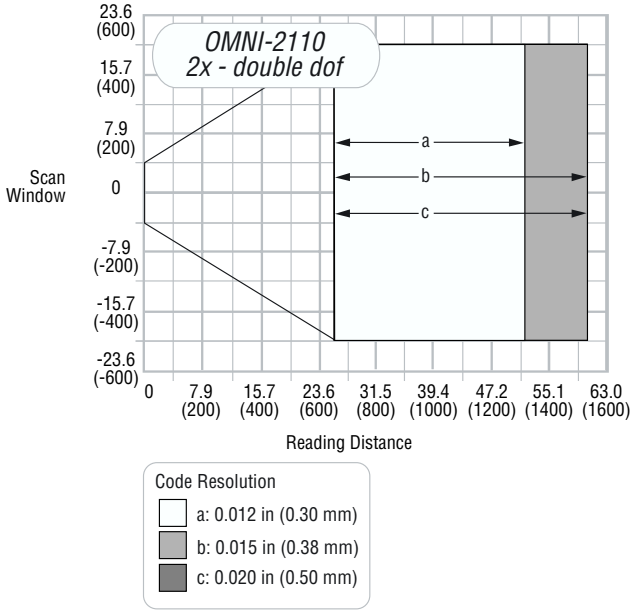

TECHNICAL SPECIFICATIONS

	OMNI-2110
Scanning Characteristics	
Scanning Frequency	550 Hz
Maximum Conveyor Speed	600 ft/min (198 m/min)
Light Source	Visible laser diode (635 nm); CDRH Class II
Reading Area (Bar Code Dependent)	Up to 40 in (1016 mm) with 36 in (914 mm) depth of field on a typical 0.020 in (0.50 mm) bar code
Resolution	0.008 in (0.20 mm)
Bar Code Types	
Bar Code Symbology	Code 39, Interleaved 2/5, Codabar, EAN, UPC, Code 128
Label Types	Thermal, plastic coated, any surface
Communications / I/O / Indicators	
Serial Ports	RS 232/RS 422 Host, RS 232 Setup, RS 232 Slave
Network Ports	RS 485, Starnode LAN, Ethernet TCP/IP, optional DeviceNet, SDS
LED Indicators	10 discrete LEDs for status monitoring, optional CiMAX® terminal with 80-character display
Switching Inputs	Up to 8 optically isolated logic inputs for photocells, height sensing and tachometer
Switching Outputs	Up to 8 open collector outputs for light trees, diverters and alarms (relays optional)
Process Control	"C" Programmable I/O and communications
Setup	Via setup port using CiMAX® 1400 terminal or PC with terminal emulation or CiMenu program, web browser-based graphical GUI
Diagnostics	Accessible via Set-up port, Network ports, optional modem
Mechanical / Electrical	
Power	115/230 V AC ± 15%, 50/60 Hz, 4 amps max.
Dimensions (L x W x H)	Scanner: 24.0 x 18.5 x 9.0 in (610 x 470 x 229 mm); Interface box: 13.2 x 13.2 x 3.0 in (335 x 335 x 76 mm)
Weight	Scanner: 53 lb (24 kg); Interface box: 13.5 lb (6 kg)
Housing / Enclosure Rating	Painted steel, NEMA 12 / IP 51
Environmental	
Ambient Operating Temperature	32…122° F (0…50° C)
Relative Humidity	5…95%, non-condensing
Programming	CiMenu32™ for Windows™ Utility

OPS 290

FEATURES

- Modular concept allows individual adaptation to your application
- Use of CLV 490 high-end scanners (See CLV 490 features, pages 58-63)
- Real time Auto Focus Control function without additional hardware
- Parameters stored in the connecting plug and quick-release brackets allow easy scanner replacements
- Extremely large depths of field even with narrow module widths thanks to the Auto Focus Control function and state-of-the-art optics design

READING RANGES *Dimensions in inches (mm)*

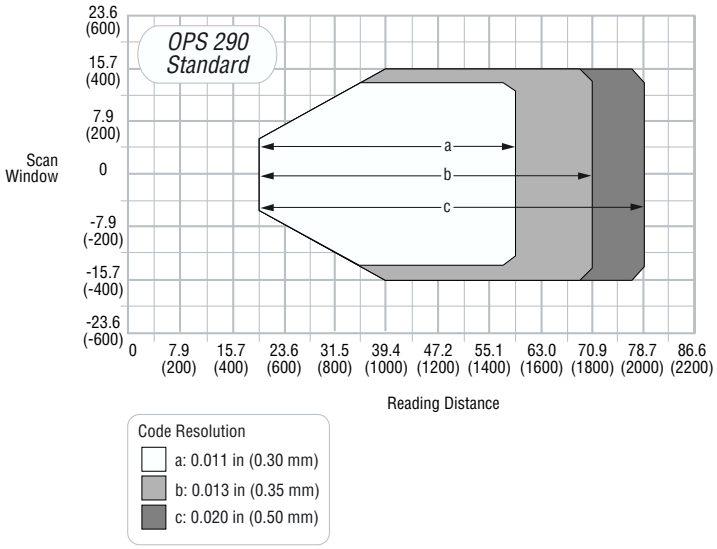

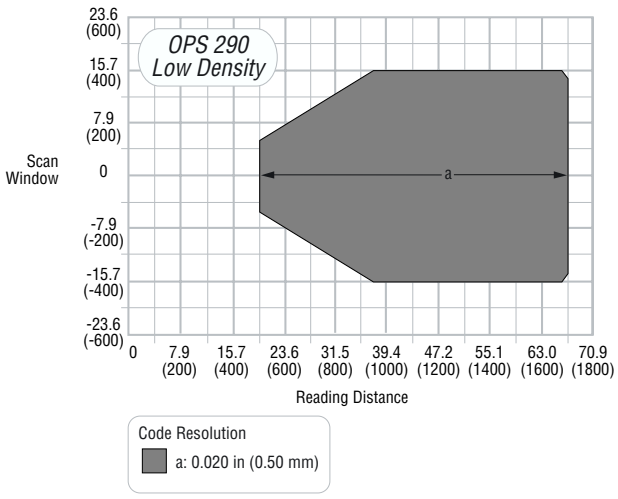

TECHNICAL SPECIFICATIONS

	OTS	OTC
Number of Bar Codes per Object	Maximum 20 (with maximum 4 scanners)	
Number of Bar Codes per Reading Field	Maximum 15 (auto-discriminating)	
• Bar Code Types	Code 39, Code 128, Code 93, Codabar, EAN, EAN 128, UPS, Interleaved 2/5	
• Bar Code Length	Maximum 50 characters (maximum 600 characters for all bar codes per reading gate)	
Print Ratio	2:1 to 3:1	
Optical Indicators	26 x LED status and function indicators	
Reading Timing	Switching inputs “Triggers 1, 2 and 3” / Software trigger	
“Host” Data Interface	RS 232 or RS 422	
Electrical Connections	1 x AUX connection (9-pin D-Sub high density plug)	
(Diagnosis, Serial)	1 x CAN connection (9-pin D-Sub high density socket)	
Operating Voltage / Power Consumption	115 V AC (230 V AC) +10%/-15%	24 V +20%/-10%
Housing	Sheet steel, lacquered, reading window from PC	Continuous cast aluminum sections
Protection Category	IP 65 (DIN 40 050)	
Protection Class	Class III (VDE 0106 / IEC 1010-1)	
EMC	IEC 801	
Vibration	IEC 68-2-6 Test FC	
Shock	IEC 68-2-27 Test EA	
Weight	Approx. 22.7 lb (10.3 kg)	Approx. 2.9 lb (1.3 kg)
Operating Temperature	32…122°F (0…50°C)	
Storage Temperature	-13…158°F (-25°…70°C)	
Maximum Relative Humidity	90%, non-condensing	

	OPS 290
Number of Scanners and Degree of Angle to Conveyor Direction	2 line scanners at 45°
Maximum Tilt	45°
Scan Rate	600…1200 Hz
Coverage for 0.014…0.02 in (0.35…0.5 mm)	
• Width	31.5 in (800 mm)
• Height	31.5 in (800 mm)
• Speed	Up to 590 ft/min (180 m/min)
Code Height for Speed 1 m/s	>0.6 in (>15 mm) (C128)
	>0.8 in (>20 mm) (ITF2/5)
Code Height for Speed 2 m/s	>0.8 in (>20 mm) (C128)
	>1.0 in (>25 mm) (ITF2/5)

OPS 290

- 2 line scanners
- 45° to conveyor direction
- Scanning rate: 1200 Hz
- Cover for 0.01…0.02 in (0.35…0.50 mm):

  -Width: 31.5 in (800 mm)

  -Height: 31.5 in (800 mm)

  -Speed: Up to 590 ft/min (180 m/min)

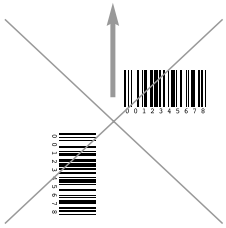

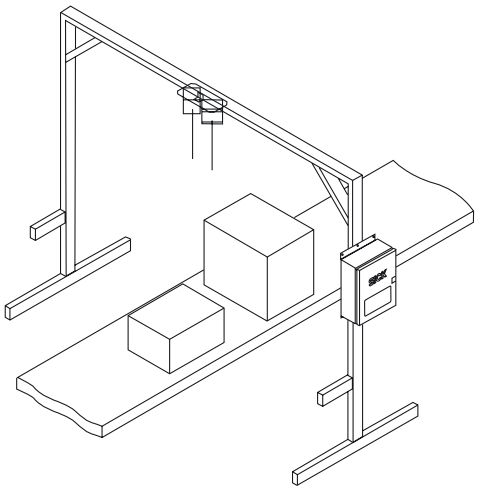

OPS 490

FEATURES

- Modular concept allows individual adaptation to your application
- Use of CLV 490 high-end scanners (See CLV 490 features, pages 58-63)
- Real time Auto Focus Control function without additional components
- Parameters stored in the connecting plug and quick-release brackets allow easy scanner replacements
- Extremely large depths of field even with narrow module widths thanks to the Auto Focus function and state-of-the-art optics design

READING RANGES *Dimensions in inches (mm)*

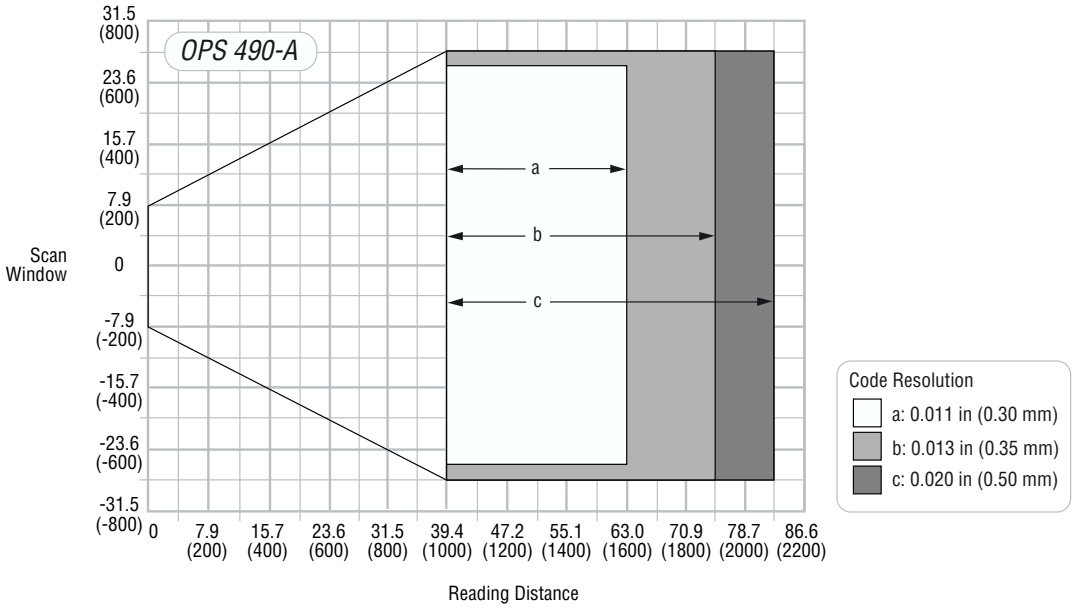

TECHNICAL SPECIFICATIONS

	OTS	OTC
Number of Bar Codes per Object	Maximum 20 (with maximum 4 scanners)	
Number of Bar Codes per Reading Field	Maximum 15 (auto-discriminating)	
• Bar Code Types	Code 39, Code 128, Code 93, Codabar, EAN, EAN 128, UPS, Interleaved 2/5	
• Bar Code Length	Maximum 50 characters (maximum 600 characters for all bar codes per reading gate)	
Print Ratio	2:1 to 3:1	
Optical Indicators	26 x LED status and function indicators	
Reading Timing	Switching inputs "Triggers 1, 2 and 3" / Software trigger	
"Host" Data Interface	RS 232 or RS 422	
Electrical Connections	1 x AUX connection (9-pin D-Sub high density plug)	
(Diagnosis, Serial)	1 x CAN connection (9-pin D-Sub high density socket)	
Operating Voltage / Power Consumption	115 V AC (230 V AC) +10%/-15%	24 V +20%/-10%
Housing	Sheet steel, lacquered, reading window from PC	Continuous cast aluminum sections
Protection Category	IP 65 (DIN 40 050)	
Protection Class	Class III (VDE 0106 / IEC 1010-1)	
EMC	IEC 801	
Vibration	IEC 68-2-6 Test FC	
Shock	IEC 68-2-27 Test EA	
Weight	Approx. 22.7 lb (10.3 kg)	Approx. 2.9 lb (1.3 kg)
Operating Temperature	32…122°F (0…50°C)	
Storage Temperature	-13…158°F (-25°…70°C)	
Maximum Relative Humidity	90%, non-condensing	

	OPS 490
Number of Scanners and Degree of Angle to Conveyor Direction	4 line scanners at 45°
Maximum Tilt	45°
Scan Rate	1200 Hz per scan line
Coverage for 0.014…0.02 in (0.35…0.5 mm)	
• Width	59.1 in (1500 mm)
• Height	31.5 in (800 mm)
• Speed	Up to 590 ft/min (180 m/min)
Code Height for Speed 1 m/s	>0.6 in (>15 mm) (C128)
	>0.8 in (>20 mm) (ITF2/5)
Code Height for Speed 2 m/s	>0.8 in (>20 mm) (C128)
	>1.0 in (>25 mm) (ITF2/5)

OPS 490

- 4 line scanners
- 45° to conveyor direction
- Scanning rate: 1200 Hz/scanning line
- Cover for 0.01…0.02 in (0.35…0.50 mm):

  -Width: 59.1 in (1500 mm)

  -Height: 31.5 in (800 mm)

  -Speed: Up to 590 ft/min (180 m/min)

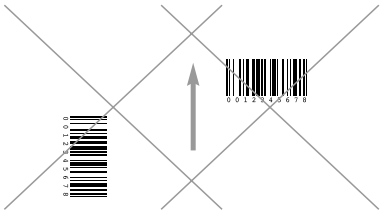

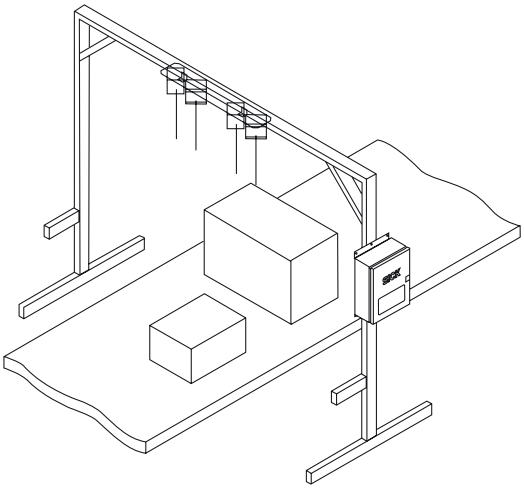

Advanced OPS & Tunnel Scanning Systems

FEATURES

- Modular design configuration to optimize coverage requirements
- Choice of high performance OPS, OMNI-2110 or MHV vision systems
- Optional VMS dimensioning system
- Real time and Dynamic Focus Control for faster throughput
- Powerful integrated tracking capabilities
- Flexible communication for today's modern host, network and controls systems
- High scan frequency for speeds up to 590 ft/min (180 m/min)
- Remote diagnostics tools to monitor system performance
- Aggressive label recognition and reconstruction software for difficult to read labels
- Cloning module to store configuration parameters for quick scanner replacement
- Easy to use setup and configuration tools

Advanced OPS & Tunnel Scanning Systems

Not every tunnel application is created equally, so SICK Auto Ident's modular tunnel concept allows individual adaptation to any application. Tunnel scanning solutions are configured using our most advanced scanning and control products. Whether your application requires ultra wide coverage on a single plane or multi-sided reading for every package side, SICK has a solution that will meet your needs reliably and accurately. We use high performance CLV 490 high-end line scanners (page 58), maximum-performance OMNI-2110 omni scanners (page 78), or the MHV vision-based bar code reading system (page 98) to create the most effective solution for your needs. And, if you require individual item dimensions or volume data, the VMS Volume Measurement Systems (page 88) can be easily added to provide you with a complete scanning and dimensioning system to optimize freight handling.

SICK uses the latest available technologies to produce the most accurate and dependable products. State-of-the-art optics and Dynamic Focus Control provide extended coverage and depth of field, while high scan rates (up to 1200 Hz) and advanced code reconstruction software combine to ensure reliable reading and tracking even at speeds over 500 ft/min (152 m/min). The OTS (Omni Tracking System), the gateway and controller for data transmitted from each scanner in an OPS system to the host, offers power and flexibility for communicating with today's most sophisticated control, host and network systems. To track system performance and spot trouble before it begins, optional remote diagnostics software (RDT 400 and CiView) provides constant feedback on system performance.

High performance and reliability are only part of the story. Simplified installation and easy maintenance are also designed into each system. The compact, lightweight design of the CLV 490 make setting up OPS tunnel systems a breeze. Common CLV Setup Software, quick release brackets, CAN network connectivity, and SICK's own external parameter cloning modules, which store scanner configuration data for quick replacement, also streamline installation and service. For even more power and flexibility, the OMNI-2110 or MHV-2020 are the most robust systems available today. OPS systems are available in standard omni directional configurations for up to 24 scanners. OMNI-2110 and MHV-2020 systems are custom-configured based on your specific applications requirements. Contact your sales representative or customer service representative today to find out more.

ALIS - Airport Luggage Identification System

FEATURES

- Extremely high reading rates
- Parameters stored in the connector for quick replacement of scanners
- For T-codes as well as linear codes
- Auto Focus Control for large depth of field
- Suitable for belt conveyors and tray sorters
- Integrated decoder with real time decoding and patented SMART code detection
- Maintenance free
- Full diagnostics

ALIS (Airport luggage Identification System) is a flexible bar code scanning system that is specially designed to identify IATA bar codes on pieces of luggage. Using state-of-the-art technology and providing all-around support, SICK is one of the only solution partners in this area.

Regardless of whether the bar code labels are twisted, dirty or bent, the high performance capabilities of the CLV 490 bar code scanner (page 58) and the optimum position of the scanners mean that reading ranges of 97% and higher are possible.

ALIS is designed to read all IATA bar codes (both T-codes and linear codes) and can be used with belt conveyors and tray sorters. Scanner parameters stored in the connecting plug and quick-release locks enable you to replace the devices quickly. All cables are halogen-free (low smoke, low fume). Together with its modular design, this all adds up to an extremely flexible solution.

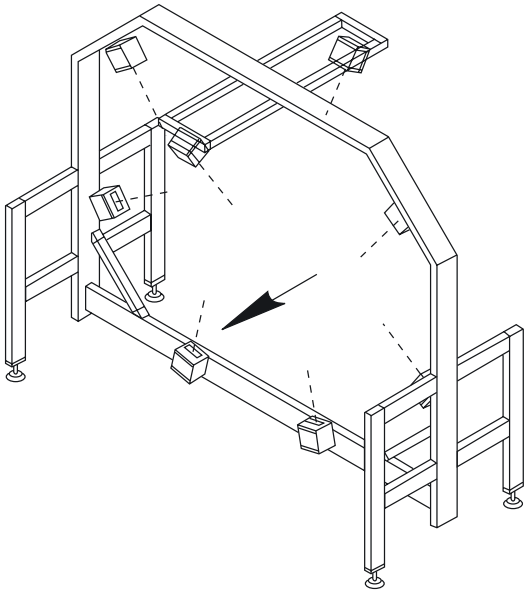

ALIS - Airport Luggage Identification System

TECHNICAL SPECIFICATIONS

	BAR CODE SCANNER
Scanning Characteristics	
Scanner Type	CLV 490 (line scanner)
Scanning Frequency	600…1200 Hz (software selectable)
Light Source	Laser diode (650 nm)
Laser Classification	CDRH Class II (pursuant to IEC 825)
Reading Distance (Bar Code Dependent)	20…86 in (500…2200 mm)
Print Contrast	≥ 75% (PCS)
Communications / I/O / Indicators	
Baud Rate	300…57,600 (software selectable)
LED Indicators	Device ready, read result, sensor, data
Switching Inputs	6 x PNP, opto-decoupled, maximum 30 V DC
Switching Outputs	4 x PNP, maximum 25 mA / 24 V DC; device ready, read result
Mechanical / Electrical	
Supply Voltage	Operating voltage 24 V DC ± 20%
Current Consumption	Approx. 12.0 W
Dimensions	4.6 x 4.6 x 3.7 in (117 x 117 x 94 mm)
Weight	Approx. 3.3 lb (1.5 kg)
Housing	Die cast aluminum
Connectivity	2 x 15-pin D-Sub high density connectors (1 female / 1 male)
Environmental	
Ambient Operating Temperature	32…104°F (0…40°C)
Storage Temperature	-4…158°F (-20°…70°C)
Vibration	To IEC 68-2-6 test FC
Shock	To IEC 68-2-27 test EA
EMC	To IEC 801

	EVALUATION UNIT
Mechanical / Electrical	
Functions	Tracking controller, CAN Bus master, Host communication and diagnostic data transfer
Number of Bar Code Scanners per System	Maximum 24 scanners
Host Protocols	
Function-Switching Inputs	SICK Standard, SICK CLX Network, Siemens 3964 (R)/RK512, Crisplant S2000, Demag sorter protocol, customer-specific protocols on request
Function-Switching Outputs	4 x PNP, short-circuit protected, adjustable length of impulse, 1 relay output 24 V DC, 1.5 A, 250 V AC, 1.5 A
Communications	
Host Data Interface	RS 232 or RS 422/485, adjustable data output format, optional bus connections: Ethernet, Profibus, Interbus and DeviceNet
Host Data Transfer Rate	300…57,600 bits/s
Environmental	
Operating Voltage	115/230 V AC -15%/+10%
Housing	Sheet steel, lacquered, read window made of PC
Enclosure Rating	IP 65 (to DIN 40 050)
Protection Class	Class III (to VDE 0106/IEC 1010-1)
EMC/Vibration/Shock Tests	To EN 55011, EN 50082-1, EN 50082-2 / to IEC 68-2-6 test FC / according to IEC 68-2-27 Test EA
Weight	Approx. 22.7 lb (10.3 kg), including power supply
Maximum Relative Humidity	90%, non-condensing
Dimensions (L x W x H)	12.0 x 15.8 x 6.5 in (300 x 400 x 165 mm)





VMS - Volume Measurement Systems

FEATURES

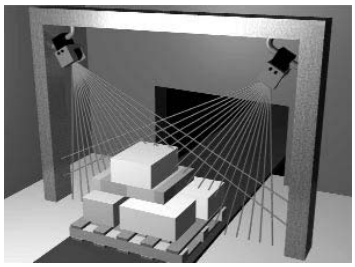

- Non-contact measurement process using SICK's LMS 200 Laser Measurement System
- Real time processing with optional integration of bar code data
- Determination of volumes for objects measuring up to 118.1 x 118.1 x 295 in^3 (3000 x 3000 x 7500 mm^3)
- Accuracies up to ±0.4 in (10 mm) (application dependent)
- Measured values provided:
  - -length, width, height
  - -box volume
  - -actual volume
- Object conveyance speeds of up to 400 ft/min (2 m/s)
- Flexible and easy installation
- Self monitoring functionality
- Laser Class I (eye safe)

Parcels and pallets, flight luggage and air freight containers are examples of objects for which a manual determination of volume is relatively imprecise, difficult and sometimes not even possible. Rapid conveyor speeds, complex geometries and large dimensions require rapid automatic data processing. SICK offers two solutions with these requirements in mind so that you can match the right solution to your specific application. Whether at parcel distribution centers, freight depots or airports- SICK's volume measurement system offers a standard solution for your automated dimensioning requirements.

TECHNICAL SPECIFICATIONS

	VMS 100	VMS 200
Object shape	Rectangular	Nearly any shape*
Minimum Object Size (L x W x H)	8 x 8 x 4 in (200 x 200 x 100 mm)	4 x 4 x 4 in (100 x 100 x 100 mm)
Maximum Object Length	295 in (7500 mm)	295 in (7500 mm)
Maximum Object Width	59 in (1500 mm)	118 in (3000 mm)
Maximum Object Height	59 in (1500 mm)	118 in (3000 mm)
Typical Minimum Object Separation	>4 in (100 mm)	>4 in (100 mm)
Conveyor Speed	Up to 400 ft/min (2 m/s), constant or variable; shaft encoder available on request	
Typical Accuracy (L x W x H)	For minimum object size of 8 x 8 x 8 in (200 x 200 x 200 mm)	
• Up To 200 ft/min (1 m/s)	±0.6 in, ±0.6 in, ±0.6 in (±15 mm, ±15 mm, ±15 mm)	±0.4 in, ±0.4 in, ±0.4 in (±10 mm, ±10 mm, ±10 mm)
• Up to 400 ft/min (2 m/s)	±1.0 in, ±0.75 in, ±0.75 in (±25 mm, ±20 mm, ±20 mm)	±0.6 in, ±0.6 in, ±0.6 in (±15 mm, ±15 mm, ±15 mm)
Output Data	Length, width, height; bar code data on connection of a bar code scanner	Length, width, height; box & real volumes; angle of rotation; index; bar code data on connection of a bar code scanner
Data Output Interface	RS 232 or RS 422; connection to bus systems on request	RS 232 or RS 422; connection to bus systems on request
LMS 200 Enclosure Rating	IP 65	IP 65
Laser Protection Class	Class I (IR light)	Class I (IR light)
Measurement Principle	Time-of-flight measurement with SICK LMS 200	Time-of-flight measurement with SICK LMS 200

**The dimensions of object details must be at least 2 x 2 x 2 in (50 x 50 x 50 mm)*

Components of VMS Systems

VMS 100

- 1 x SICK LMS 200 Laser Measurement System with mounting set and connection set
- 1 x LMI 200 Laser Measurement Interface with evaluation and commissioning software
- Software license

VMS 200

- 2 x SICK LMS 200 Laser Measurement Systems with mounting set and connection set
- 1 x industrial PC with evaluation and commissioning software
- Software license

RDT 400 - Remote Diagnostics Tool for OPS & ALIS

FEATURES, HARDWARE & SOFTWARE

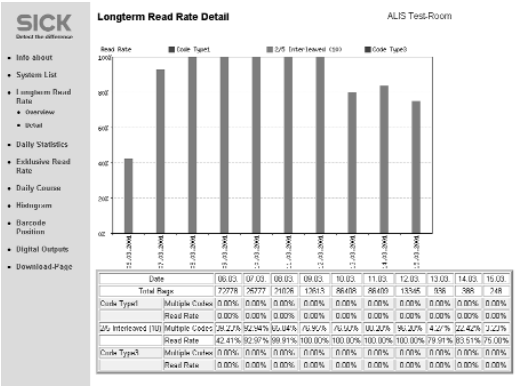

Date		06.03.	07.03.	08.03.	09.03.	10.03.	11.03.	12.03.	13.03.	14.03.	15.03.
Total Reps		77778	25777	74806	13613	86408	86409	13565	936	588	248
Code Type1	Multiple Codes	0.00%	0.00%	0.00%	0.00%	0.00%	0.00%	0.00%	0.00%	0.00%	0.00%
	Read Rate	0.00%	0.00%	0.00%	0.00%	0.00%	0.00%	0.00%	0.00%	0.00%	0.00%
2/5 Interleaved (10)	Multiple Codes	28.22%	92.94%	90.94%	76.95%	76.50%	90.20%	96.20%	4.27%	22.42%	2.22%
	Read Rate	42.41%	92.97%	99.91%	100.00%	100.00%	100.00%	100.00%	79.91%	83.51%	75.00%
Code Type3	Multiple Codes	0.00%	0.00%	0.00%	0.00%	0.00%	0.00%	0.00%	0.00%	0.00%	0.00%
	Read Rate	0.00%	0.00%	0.00%	0.00%	0.00%	0.00%	0.00%	0.00%	0.00%	0.00%

- RDT 400 supports ALIS Airport Luggage Identification Systems and all OPS systems
- Connection of up to 64 scanner systems to the central RDT 400 server via Ethernet
- Supports scanner systems consisting of up to 24 individual scanners
  - -Detailed visualization
  - -Total system performance
  - -Long term read rate (up to one year)
  - -Detailed read rate
  - -Hourly read rate
  - -Single scanner statistics
  - -Read items
  - -Multi-read histograms
- Remote monitoring and download of log files via Internet/Intranet
- Monitoring of system performance
  - -Automatic check of system read rates
  - -Automatic check of individual scanner read rates
  - -Programmable alarm threshold for monitoring read rates

RDT 400 (Remote Diagnostic Tool) is a powerful graphic visualization tool for monitoring and controlling any of SICK's OPS tunnels and ALIS systems. It allows you to check individual scanner and system performance from anywhere in the world via your company network, Intranet, or other remote communication access and RDT server connection. It is the best way to stay on top of system performance and catch trouble before it begins. Easy to follow Windows™-based user interfaces provide details graphically about the performance characteristics of all scanners including read items, multi-read histograms and read rate performance by the hour, day or even annually. You can also program alarm thresholds to monitor read rates and alert you to when system performance falls to an unacceptable level.

RDT 400 - Remote Diagnostics Tool for OPS & ALIS

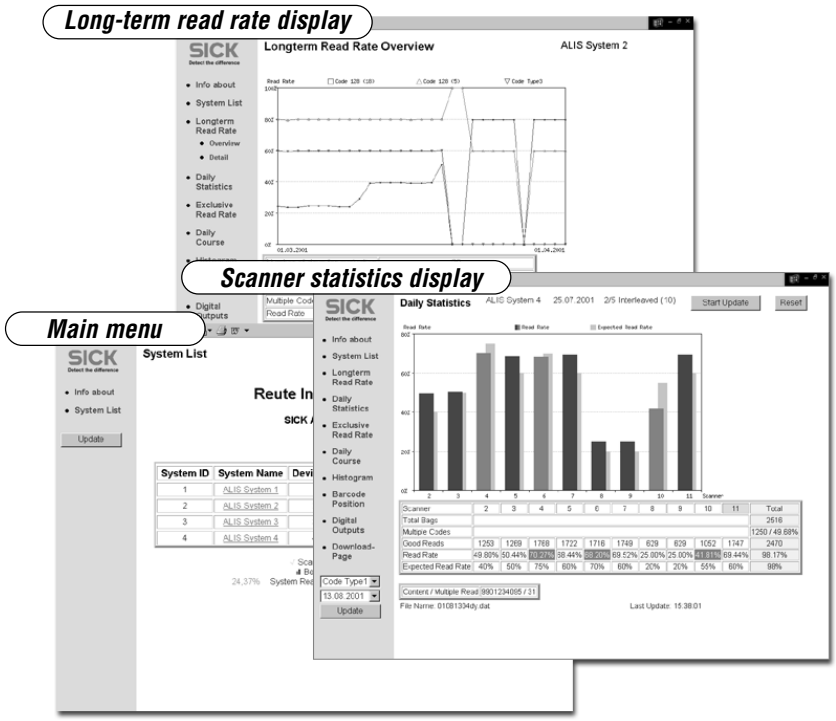

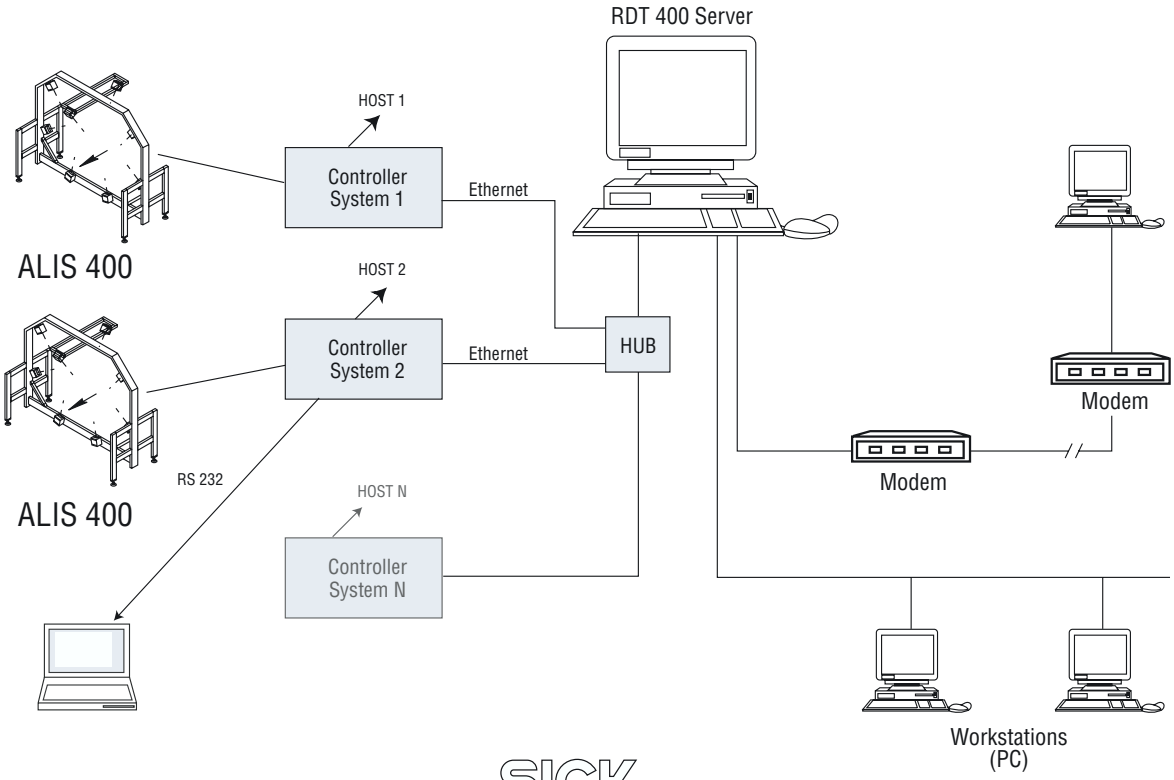

INTRODUCTION

SICK Auto Ident, Inc. can provide the perfect camera-based automatic identification solution for small to large applications. Whether you are reading a direct-mark 2D code on a part during a manufacturing process, or a combination of linear and 2D codes in a material handling application, SICK Auto Ident has the ideal solution.

SICK Auto Ident builds camera-based solutions to the same exacting performance and quality standards that you have come to expect from all of our products. By combining our industry-leading knowledge of optics with the revolutionary technology of machine vision, we are able to provide the highest quality and performance automatic identification solutions for your needs.

ICR 850
Pgs. 94-97

SICK Auto Ident has combined the versatility and speed of a line CCD camera with the power of a laser illumination to build a 2D code reader that is as easy to use as a standard laser-based scanner.

The ICR 850 is ideal for reading small linear or 2D codes on items which travel on small conveyors. Identification, quality tracking or sorting applications can be served in fields like PCB production, document handling, pharmaceutical packaging or other manufacturing environments.

Without having to stop or slow down the conveyor, the ICR 850 reads any single code or any combination of linear and 2D codes randomly positioned on the coded item. For fast or slow moving parts, printed labels or direct marks, the ICR 850 is the perfect solution for your application.

The ICR 850 is ideal for reading small linear or 2D codes on parts for manufacturing or traceability applications or a variety of other applications. Whether it's a linear or 2D DataMatrix code, a fast or slow moving part, a printed label or direct mark, the ICR 850 is the perfect solution for your application.

ICR 850 Applications:

- PCB production
- Document handling
- Pharmaceutical production

MACHINE VISION SYSTEMS

MHV-1000
Pgs. 98-99

The MHV-1000 is a fully integrated CCD-based bar code imaging system. It is designed with the latest in digital camera, image processing and decoding technologies. This advanced mega pixel camera and decoding system provides excellent image quality and read rate performance on traditional 1D and 2D symbols in any 360 degree orientation. It is the ideal solution for today's most common automated and manual presentation applications.

Since the MHV-1000 supports all traditional linear codes, plus Data Matrix, PDF 417 and other popular 2D area codes, you can be assured that even as your reading requirements change, your hardware requirements will not.

MHV-1000 Applications:

- Package/fulfillment centers
- eCommerce distribution centers
- Parcel/merchandise distribution
- Library check out
- Document/security pass scanning applications

MHV-2020
Pgs. 100-101

The MHV-2020 is a high speed imaging and decoding system. It has the exceptional capability to read poorly printed and very short height bar codes, even under plastic. The MHV-2020 reads all common 1D and 2D symbologies in any orientation. A high resolution 7500 pixel line CCD allows coverage of wide conveyors even with small bar codes.

The MHV-2020 is designed for high speed conveyor applications where the orientation of the 1 or 2-D code is unknown. Typical applications include wide conveyors, tilt trays and other sortation equipment.

MHV-2020 Applications:

- Parcel and general merchandise distribution
- High speed sortation, command and control systems
- eCommerce distribution
- Packaging and order fulfillment

ICR 850 - 2D Code Reader

FEATURES

- Reads fast-moving and low contrast 2D codes
- Also reads all common linear bar codes using SMART code reconstruction
- High scanning frequency (15,000 Hz)
- Reading distance up to 4 in (101 mm)
- Reading field height up to 3.1 in (80 mm)
- Compact design 4.5 x 3.2 x 1.5 in (115 x 80 x 39 mm)
- Line CCD technology with integrated laser light source
- Fast and easy set up
- Utilizes SICK's Windows™- based CLV Setup Software
- Connectivity options:
  -Host: RS 232, RS 422/485, CAN-open, Ethernet

MODELS AND PART NUMBERS

	RS 232, RS 422/485	RS 232, RS 422/485, Ethernet
Front Emitting Scanner		
Model	ICR 850-0010	ICR 850-0020
Part Number	1 019 580	1 022 583
Side Emitting Scanner		
Model	ICR 850-1010	ICR 850-1020
Part Number	1 019 602	1 022 585

TECHNICAL SPECIFICATIONS

	ICR 850
Scanning Characteristics	
Scanning Method	Line CCD
Scanning Frequency	Up to 15 kHz
Light Source	Laser illumination, red light (650 nm); CDRH Class II
Reading Distance	4.0 in (101.6 mm) Fixed Focus
Reading Field Height	Up to 3.1 in (80 mm)
Depth of Field (Bar Code Dependent)	±0.4 in (±10.2 mm)
Resolution	0.006…0.020 in (0.17…0.50 mm) cell size for DataMatrix codes
Bar Code Types	
Bar Code Symbology	2D: DataMatrix ECC200; Linear: UPC, Codabar, Code 39, UPC, EAN, Interleaved 2/5, Code 128, EAN 128, Pharmacode
Communications / I/O / Indicators	
Host Interface	RS 232, RS 422/485, CAN-open, Ethernet (10 MB)
LED Indicators	4 LED status indicators
Mechanical / Electrical	
Supply Voltage	10…30 V DC
Current Consumption	0.292 mA at 24 V DC / 7.0 W
Dimensions	End scanning: 3.1 x 1.5 x 4.4 in (80 x 39 x 111 mm); Side scanning: 3.1 x 1.5 x 4.5 in (80 x 39 x 115 mm)
Connectivity	15-pin D-Sub high density connector (Option: RJ 45 socket for Ethernet)
Environmental	
Ambient Operating Temperature	32…104°F (0…40°C)
Storage Temperature	-4…158°F (-20…70°C)
Protection	To IEC 801, IP 65 (without RJ 45)
Programming	Windows™-based CLV Setup Software

PINOUTS

15-pin male connector

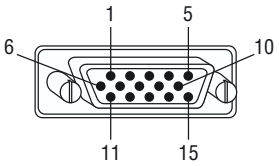

Pin	Signal	Function
1	10…30 V DC	Power supply
2	RxD (Terminal)	Auxiliary interface (Receiver)
3	TxD (Terminal)	Auxiliary interface (Sender)
4	Sensor 2	Switching input (Function programmable)
5	GND	Ground
6	RD+ (RS 422/485)	Host interface (Receiver)
7	RD- (RS 422/485); RxD (RS 232)	Host interface (Receiver)
8	TD+ (RS 422.485)	Host interface (Sender)
9	TD- (RS 422/485); TxD (RS 232)	Host interface (Sender)
10	CAN H	CAN Bus (In/Out)
11	CAN L	CAN Bus (In/Out)
12	Result 1	Switching output (Function programmable)
13	Result 2	Switching output (Function programmable)
14	Sensor 1	Switching input for reading gate signal
15	SensGND	Common ground for all inputs screen

ICR 850 - 2D Code Reader

READING RANGES *Dimensions in inches (mm)*

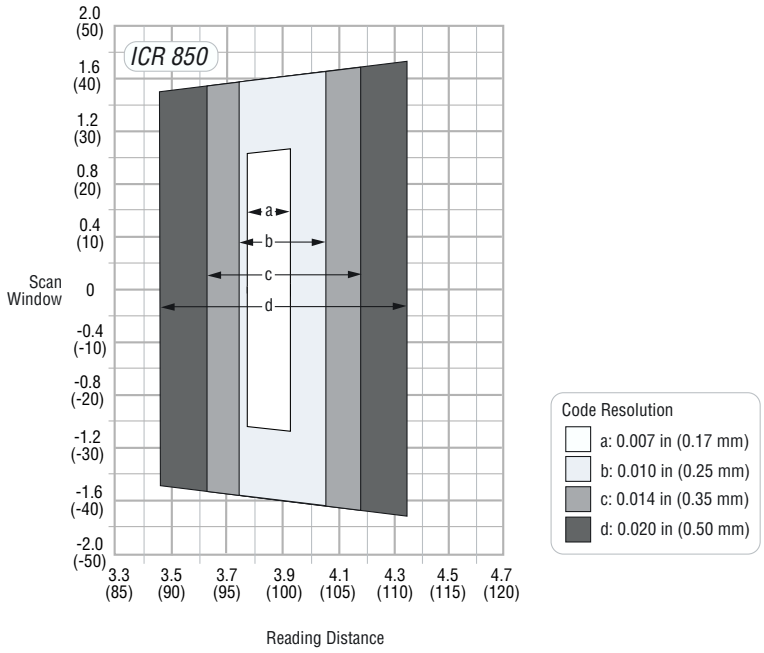

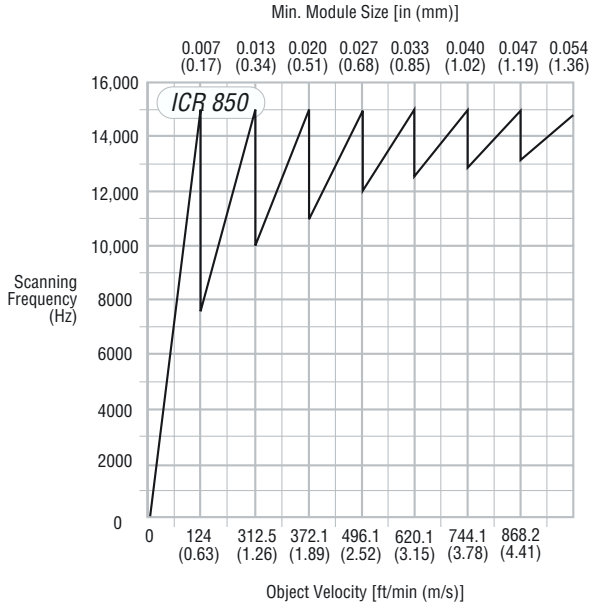

DIMENSIONAL DRAWINGS *Dimensions in inches (mm)*

ICR 850 front emitting scanner

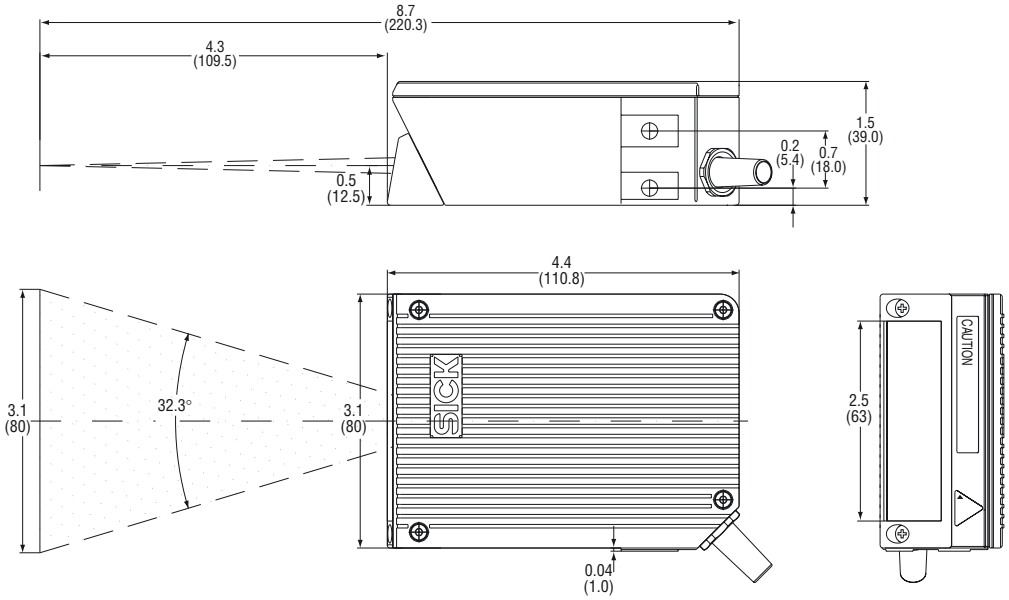

ICR 850 side emitting scanner

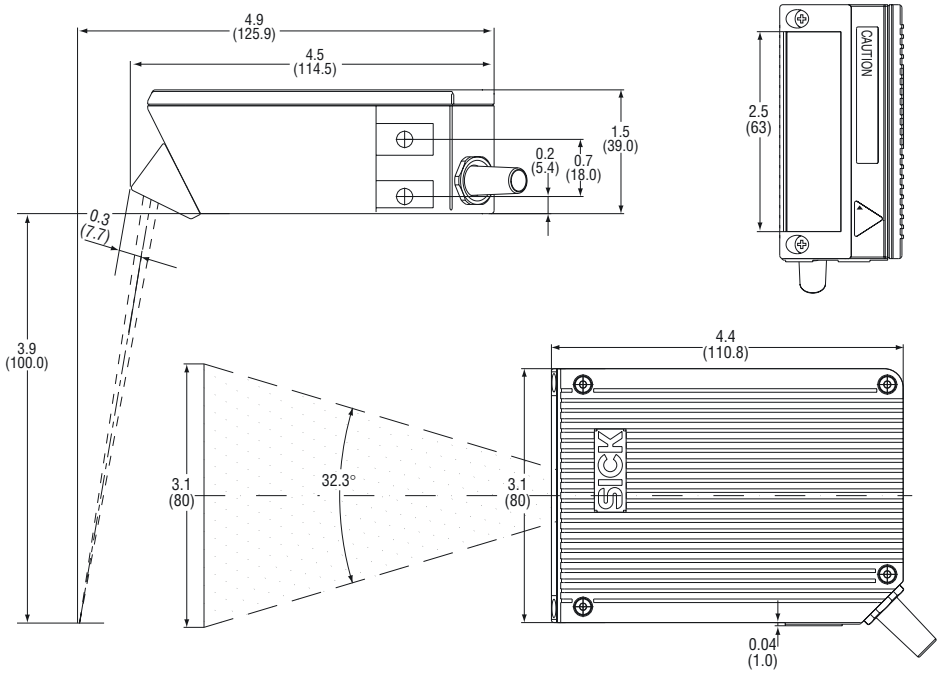

MHV-1000

FEATURES

- Omni directional bar code/area code scanner
- Area array camera produces high read rates
- Image output capability
- High resolution decodes symbologies as low as 0.10 in (2.5 mm)
- 1D and 2D capabilities
- High performance light (optional)
- Laser centering
- Enhanced reading ranges
- Built-in decoder and imager all-in-one

DIMENSIONAL DRAWINGS *Dimensions in inches (mm)*

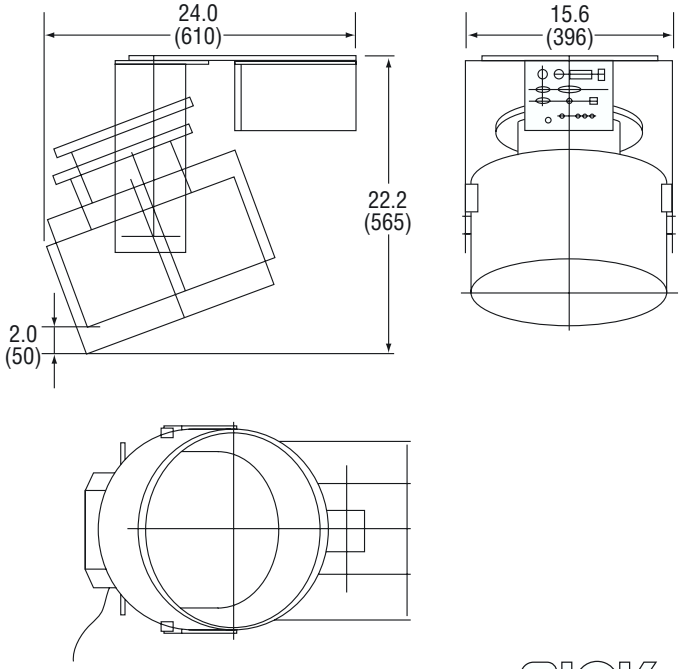

TECHNICAL SPECIFICATIONS

	MHV-1000
Scanning Characteristics	
Scanning Method	CCD area camera, 1280 x 1026 pixels
Maximum Conveyor Speed	Up to 150 ft/min (0.75 m/s) dependent on lighting and shutter speed settings
Light Source	Optional 85 and 165 W lamps
Reading Range	33.5…45.5 in (851…1156 mm)
Reading Area (Bar Code Dependent)	Minimum (near range): 8.9 x 6.6 in (226 x 168 mm); Maximum (far range): 11.9 x 8.9 in (301 x 226 mm)
Depth of Field	11.8 in (300 mm)
Resolution	1D: 0.010 in (0.025 mm); 2D: 0.013 in (0.33 mm)
Shutter Speed	User selectable from 1/60 to 1/9000 second
Bar Code Types	
Bar Code Symbology	1D: Code 39, Interleaved 2/5, Codabar, EAN, UPC, Code 128; 2D: Data Matrix, Maxicode, PDF 417, QRCode, US Postnet
Label Types	Thermal, plastic coated, any surface
Readability	4 bar codes per reading gate
Auto Discrimination	All symbologies may be enabled at once
Communications / I/O / Indicators	
Video Output	Standard NTSC black and white video by BNC connector
Host Interface	RS 232
Baud Rate	300…57,600 (software selectable)
Data Format	Data bits, stop bits, parity (software selectable)
Laser Pointing	Laser “X” in center, with optional coordinate data sent with decoded information
Switching Inputs	1 sensor input, optically isolated
Switching Outputs	Up to 3 open collector outputs for light trees, diverters and alarms
Trigger Methods	Sensor input (I/O interface) / Serial (host interface) / Free running
Mechanical / Electrical	
Supply Voltage	Reader: 120 V AC (85 W lamp); 240 V AC (165 W lamp)
Current Consumption	Decoder: 40 W max, 120/240 V AC, 50/60 Hz; Lamps: 85 W or 165 W
Dimensions (L x W x H)	Reader: 10.0 x 6.75 x 5.5 in (254 x 171 x 140 mm); w/lighting: 24.0 x 15.6 x 22.3 in (610 x 396 x 566 mm)
Weight	Reader only: 13.2 lb (6 kg); reader w/light: 33 lb (15 kg)
Housing / Enclosure Rating	Painted steel, NEMA 12 / IP 51
Connectivity	9-pin D-Sub connectors; Ethernet: RJ-45 100 MHz
Environmental	
Ambient Operating Temperature	32…122° F (0…50° C)
Vibration	To IEC 68-2-6 test FC
Shock	To IEC 68-2-27 test EA
EMV	To IEC 801
Maximum Relative Humidity	80%, non-condensing

MHV-2020

FEATURES

- High resolution omni directional imaging scanner
- 7500 pixel high speed linear CCD imager enables reading of small code sizes
- 1D and 2D capable
- Integrated high performance lighting
- Completely sealed optics

DIMENSIONAL DRAWINGS *Dimensions in inches (mm)*

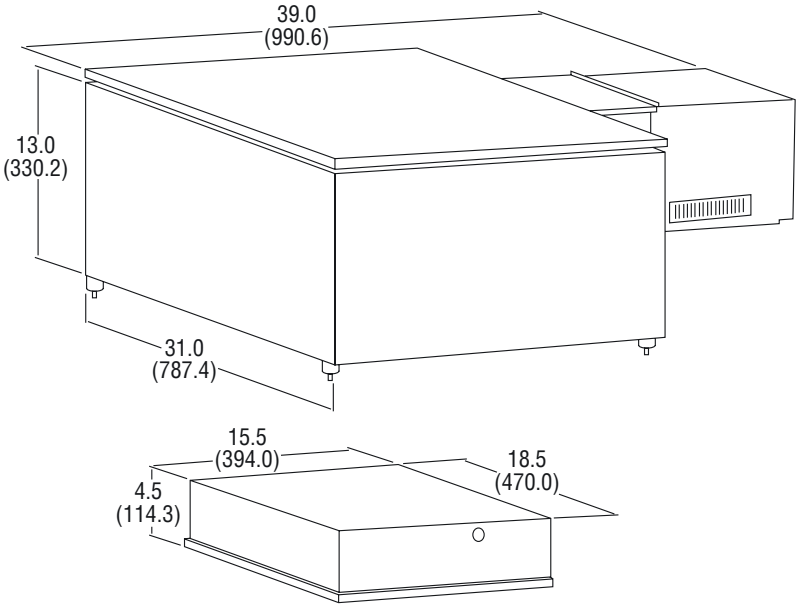

TECHNICAL SPECIFICATIONS

	MHV-2020
Scanning Characteristics	
Scanning Method	CCD line scan camera, 7500 pixels
Scanning Frequency	Up to 14,700 Hz
Maximum Conveyor Speed	600 ft/min (182 m/min) maximum for 0.015 in (0.38 mm) bar; 500 ft/min (152 m/min) maximum for 0.013 in (0.33 mm)
Light Source	High pressure sodium lamp, 24,000-hour life; 20,000 lumens typical
Reading Widths	34.0 in (863 mm) at 27.6 in (701 mm) from scanner; 45.0 in (1143 mm) at 59.1 in (1501 mm) from scanner
Depth of Field	51.0 in (1295 mm)
Resolution (Minimum bar code sizes readable)	1D code: 0.010 in (0.25 mm); 2D: 0.017 in (0.42 mm)
Bar Code Types	
Bar Code Symbology	1D: Code 39, Interleaved 2/5, Codabar, EAN, UPC, Code 128, Postnet; 2D: Data Matrix, Maxicode, PDF 417, QRCode
Label Types	Thermal, plastic coated, any surface, 0.2 in (5 mm) minimum height
Readability	1 to 10 bar codes per reading gate
Auto Discrimination	Any number of symbologies per reading gate
Communications / I/O / Indicators	
Decoding Computer	1.6 GHz, 17" monitor, keyboard, mouse, frame grabber
Host Interface	RS 232 / Ethernet T base 10/100
LED Indicators	4 LEDs for status monitoring
Switching Inputs	2 inputs, opto coupled
Switching Outputs	2 outputs, opto coupled
Trigger Methods	Photoeye input, height array input or tilt tray read signal
Mechanical / Electrical	
Supply Voltage	120 V AC (Optional 240 V AC)
Current Consumption	Camera with lamp: 500 W, 120 V AC, 60 Hz; PC Decoder: 400 W, 120 V AC, 60 Hz
Dimensions (L x W x H)	Camera and mirror box: 31.0 x 39.0 x 13.1 in (787 x 1000 x 332 mm); PC Decoder: Standard mini-tower case with 17" monitor, keyboard, mouse
Weight	Scanner: 77 lb (34 kg)
Environmental	
Ambient Operating Temperature	32…113° F (0…45° C)
Storage Temperature	-4…158° F (-20…70° C)
Maximum Relative Humidity	80%, non-condensing
Height Array System	Optional 96 points, RS 232, 19.2 Kb
Tachometer System	Optional
Interface Cables	Supplied, 16.4 ft (5 m)

INTRODUCTION

Our line of hand held scanners have excellent scanning performance at a great value. The scanners are made of rugged, durable materials for demanding work environments. SICK cordless scanners (IT 3870/ST 5770) have a long scanning range for industrial or warehouse use. The scanner's memory is field upgradable due to flash memory. The hand held scanner family includes the linear imager, 2D imager and cordless models.

Hand Held Scanner Applications:

- In-store inventory
- Outdoor sales kiosks
- Reading of vehicle registrations
- Document management
- Asset tracking
- Inventory control
- Warehouse, factory and office automation
- Transportation applications
- Medical and industrial inspection

HAND HELD SCANNERS

IT 3800
Pg. 104

The IT 3800 is a linear imager CCD hand held scanner with a bright, sharp and focused aiming line with an increased reading distance and the ability to accommodate hard to read codes.

ST 5750
Pg. 105

The ST 5750 is a high performance laser scanner with a visible red light. It features the widest range of resolution and reading distance of any hand held scanner on the market today.

IT 4410/4710
Pg. 106

The IT 4410/4710 is a 2D linear imager scanner with a bright, visible red light. This scanner offers omni directional scanning that simplifies operator training and increases productivity.

IT 3870/ST 5770
Pg. 107

The IT 3870/ST 5770 is a cordless linear imager with a visible red LED light source. Each base unit supports up to 9 scanners for increased productivity and flexibility.

IT 3800

FEATURES

- Long-range linear imager scanning for industrial or warehouse use
- Marker beam aids in aiming and finding the bar code from a distance
- Scanboot protects the scanner from drops and adds durability
- Dual interfaces switch between applications with a simple cable change
- Scanner's memory is field upgradable due to flash memory

TECHNICAL SPECIFICATIONS

	IT 3800 LR	IT 3800 VHD
Scanning Characteristics		
Scanner Design	Linear imager	
Receiving Device	3684 element linear imager	
Light Source	Visible red light (630 nm)	
Optical / Acoustical Indicators	1 x LED for Good Read / Beeper for Good Read	
Scanning/Decoding Frequency	Max. 270 Hz (adjustable)	
Field Width	5.0 in (127 mm) at 7.0 in (178 mm) distance	
Reading Distance (bar code dependent)	1…8 in (25…203 mm)	
Minimum Resolution	0.005 in (0.125 mm)	0.003 in (0.076 mm)
Angle (Skew / Pitch)	±30° / ±15°	
Mechanical / Electrical		
Operating Voltage	5 V DC ± 10%	
Current Consumption		
• Operating	150…275 mA	
• Standby	125 mA	
Housing / Enclosure Rating	Polycarbonate/ABS-blend, UL 95 V0 / IP 54	
Dimensions	5.3 x 3.1 x 6.0 in (135 x 79 x 152 mm)	
Weight	Approx. 0.36 lb (180 g)	
Environmental		
Ambient Light	0…100,000 lux	
Temperature (Ambient Operating / Storage)	32…122°F (0…50°C) / -32.8…140°F (-36…60°C)	
Relative Humidity	0…95%, non-condensing	
Shock / Vibration	25 drops (IT 3800LR) / 50 drops (IT 3800VHD) from 5 ft (1.5 m) to concrete / 5G peak from 20…300 Hz	
Agency Conformance	FCC Class B, CE EMC Class B, CE Low Voltage Directive, IEC 60825-1 LED Safety: Class 1, UL, cUL listed, TÜV	
MTBF	Per MIL-HDBK-217F ground benign exceeds 100,000 hours	
Electrostatic Discharge	15 kV	
Symbologies		
Code Types	Codabar, Code 3/9, Interleaved 2/5, Code 2/5, Matrix 2/5, Code 11, Code 128, UPC, EAN, China Postal Code (optional PDF 417)	
Communication		
Data Interfaces	Keyboard wedge for PCs and Terminals, keyboard emulation, wand emulation, TTL level RS 232, Laser Out signal	

ST 5750

FEATURES

- Durable product that survives in harsh industrial applications
- Meets IP 54 requirements
- Hands-free scanning option for faster throughput
- Dual interfaces switch between applications with a simple cable change
- Scanner's memory is field upgradable due to flash memory

TECHNICAL SPECIFICATIONS

	ST 5750
Scanning Characteristics	
Scanner Design	Laser scanner
Scan Element	Mylar resonant scan element
Light Source	Visible laser diode (650 nm); CDRH Class II
Optical / Acoustical Indicators	1 x LED for Good Read/Beeper for Good Read
Scan Rate	36 Hz
Reading Distance (bar code dependent)	0…35 in (0…889 mm)
Minimum Resolution	0.005 in (0.125 mm)
Angle (Skew / Pitch)	ST 5750A: ±65° / ±55°; ST 5750ALR: ±60° / ±65°
Mechanical / Electrical	
Operating Voltage	+5 V DC
Current Consumption	
• Operating	200 mA max.
• Standby	95 mA
Housing / Enclosure Rating	Polycarbonate/ABS-blend, UL 95 V0 / IP 54
Dimensions	3.0 x 5.8 in (75 x 148 mm)
Weight	Approx. 0.4 lb (198 g)
Environmental	
Ambient Light	Sunlight: 8000 ft. candles
Temperature (Ambient Operating / Storage)	32…122°F (0…50°C) / -22…158°F (-30…70°C)
Relative Humidity	0…95%, non-condensing
Shock / Vibration	26 drops from 6 ft (1.83 m) to concrete
Agency Conformance	FCC Class B, CE, UL, cUL listed, TÜV, EN55022 CISPR22 Class B
Electrostatic Discharge	15 kV
Symbologies	
Code Types	UPC, EAN, JAN, ISBN, Code 3/9, Code 128, Interleaved 2/5, Code 2/5, Matrix 2/5, 11, 93, MSI, Plessey, Codabar
Communication	
Data Interfaces	Keyboard wedge for PCs and Terminals, keyboard emulation, TTL level RS 232

IT 4410/4710

FEATURES

- Supports all popular matrix and stacked linear symbologies
- Omni directional scanning via video technology and image processing
- Fixed position reader opens up new 2D bar code and image capture possibilities
- Bright, intuitive aiming line
- Autodiscriminates between supported symbologies [linear and matrix codes and fonts (OCR)]

TECHNICAL SPECIFICATIONS

	IT 4410/4710 LR	IT 4410/4710 HD
Scanning Characteristics		
Scanner Design	Linear imager 2D	
Light Source	Visible red light (660 nm)	
Reading Distance (bar code dependent)	1.9…9.4 in (48…239 mm)	2.0…4.0 in (51…102 mm)
Viewing Angle	±45°	
Rotational Sensitivity	360°	
Mechanical / Electrical		
Power Requirements	4 to 9 volts	
Current Consumption		
• Low Power Mode	40 mA at 5 V DC	
• Medium Power Mode	125 mA at 5 V DC	
• High Power Mode	175 mA at 5 V DC	
• Standby	<200 µA at 5 V DC	
Dimensions	6.1 x 2.5 x 5.6 in (154 x 64 x 142 mm)	4.9 x 2.5 x 1.9 in (123 x 64 x 47 mm)
Weight	Approx. 0.4 lb (198 g)	
Environmental		
Ambient Light	0…100,000 lux	
Temperature (Ambient Operating / Storage)	32…122°F (0…50°C) / -40…158°F (-40…70°C)	
Relative Humidity	0…95%, non-condensing	
Shock / Vibration	10 drops from 5 ft (1.53 m) to concrete	
Agency Conformance	FCC Class B, CE	
Electrostatic Discharge	15 kV	
Symbologies		
Code Types	Maxicode, PDF417, Data Matrix, Code 39, Code 128, Codabar, UPC, EAN, Interleaved 2 of 5, Code 93, Postnet (US)	
OCR Fonts	OCR-A, OCR-B	
Communication		
Data Interfaces	Keyboard wedge for PCs and Terminals, HHLC (Code 128 emulation), TTL level RS 232	
Programmable Options	Baud, Parity, Data Formatting, Code Options	

IT 3870/ST 5770

FEATURES

- Multiple scanner support
- Cordless scanner/base eliminates cables
- Broad range coverage increases mobility and productivity
- State-of-the-art radio technology
- Rugged design

TECHNICAL SPECIFICATIONS

	IT 3870 LX	ST 5770 STD & ALR
Scanning Characteristics		
Scanner Design	Cordless linear imager	Cordless laser scanner
Receiving Device	3864 element linear imager	
Frequency	2.4…2.4835 GHz (ISM Band), frequency hopping, spread spectrum	
Light Source	Visible red light (630 nm)	Visible laser diode (650 nm); CDRH Class II
Optical / Acoustical Indicators	1 x LED for Good Read / Beeper for Good Read	
Scan Rate	270 Hz	36 Hz
Reading Distance (bar code dependent)	1…18 in (25…457 mm)	STD: 0…24 in (0…610 mm); ALR: 40…88 in (1016…2235 mm)
Minimum Resolution	0.0065 in (0.165 mm)	STD: 0.005 in (0.127 mm); ALR: 0.013 in (0.33 mm)
Angle (Skew / Pitch)	±30° / ±15°	STD: ±65° / ±55°; ALR: ±30° / ±55°
Mechanical / Electrical		
Power Requirements		
• Input Voltage	4…4 V DC	4.32…6 V DC
Current Consumption		
• Operating	425 mA	210 mA
• Standby	30 mA	12 mA
Housing / Enclosure Rating	Polycarbonate/ABS-blend, UL 95 V0 / IP 54	
Height	8.5 in (216 mm)	8.3 in (210 mm)
Weight	Approx. 0.9 lb (448 g)	Approx. 0.9 lb (450 g)
Environmental		
Ambient Light	0…100,000 lux	
Temperature (Ambient Operating / Storage)	32…122°F (0…50°C) / -22…140°F (-30…60°C)	-4…122°F (-20…50°C) / -22…158°F (-30…70°C)
Relative Humidity	0…95%, non-condensing	
Shock / Vibration	26 drops from 6 ft (1.83 m) to concrete	
Agency Conformance	FCC Part 15, Class B, SOR 88/475 Class B, UL, C22.2 No 950/UL 1950, cUL, RSS 210, EN 55022 Class B, TÜV, ETS 300 328	
Electrostatic Discharge	15 kV	
Symbologies		
Code Types	UPC, EAN, JAN, ISBN, Code 3/9, Code 128, Interleaved 2/5, Code 2/5, Matrix 2/5, 11, 93, MSI, Plessey, Codabar	
Communication		
Data Interfaces	Keyboard wedge for PCs and Terminals, wand emulation, RS 232	

INTRODUCTION

SICK Laser Measurement Systems can be used wherever long range collision prevention or object detection is required. The monitoring zone can be customized to meet the needs of simple or difficult applications. Precisely determined, two-dimensional contour data on the target object can be processed either internally or externally in a standard or customer-specific evaluation unit to combine this data with other known qualities such as the speed of the conveyor belt. In this way, further object parameters can easily be determined (volumes, relative positions, etc.).

The range of the LMS is dependent on the surface of the object to be sensed. The greater its reflectivity, the longer the measurement system's range. However, the over-dimensioned range reserve ensures even weakly reflective objects are reliably detected.

The outdoor LMS housing is weatherproof and rain and snow have no effect on the range of the measuring systems.

Typical Laser Measurement Systems applications include:

Measurement

- Determination of object volumes/dimensions (parcels, pallets, etc.)
- Classification of objects (containers, parcels, etc.)
- Monitoring roll slack (paper, steel industries, etc.)
- Profiling and contouring (pick and place operations, airports, car parks, etc.)

Field or Area Monitoring

- Jut-out/overhang control (high bay warehouses, material handling warehouses, airports, etc.)
- Security and surveillance (prisons, power plants, etc.)
- Façade monitoring (power plants, office buildings, schools, etc.)

Navigation

- Robots (material handling, etc.)
- AGVs (automatic guided vehicles)

Collision Prevention

- Cranes (steel mills, shipyards, etc.)
- Swinging armatures and booms (steel mills, shipyards, container yards, etc.)
- Outdoor AGVs (automatic guided vehicles)

LASER MEASUREMENT SYSTEMS

LMS 200/291
Pgs. 110-113

The LMS 200/291 is an indoor Laser Measurement System (LMS) that has high measurement resolution, contact-free measurement, a high scanning frequency and transfer of measurement data in real time.

LMS 211
Pgs. 114-117

The LMS 211 is an outdoor system that has three internally programmable monitoring fields assigned to three switching outputs. The measurement data is available in real time and can be used for further processing or control tasks.

LMS 220/221
Pgs. 118-121

The LMS 220/221 is an outdoor system that has three internally programmable monitoring fields assigned to three switching outputs. It is a contact-free device with a high scanning frequency.

LMS 200/291

FEATURES

- 180° coverage
- Indoor applications
- Long range- up to 262 ft (80 m)
- Contact-free measurement
- Target objects require no reflectors or markings
- High scanning frequency (up to 75 Hz)
- Transfer of measurement data in real time
- Active system, no illumination of target objects necessary
- Measurements possible over long distance
- Compact device construction
- Three internally programmable monitoring fields assigned to three switching outputs

Model	Max. Scanning Angle	Resolution / Typical Measurement Accuracy	Range with 10% Reflectivity	Heating	Fog Correction
LMS 200	180°	± 0.6 in / 0…26 ft (± 15 mm / 1…8 m)	32.8 ft (10 m)	no	no
LMS 291	180°	± 1.3 in / 13…65 ft (± 35 mm / 4…20 m)	98.4 ft (30 m)	no	yes

REFLECTIVITY RANGES *Range in feet (m)*

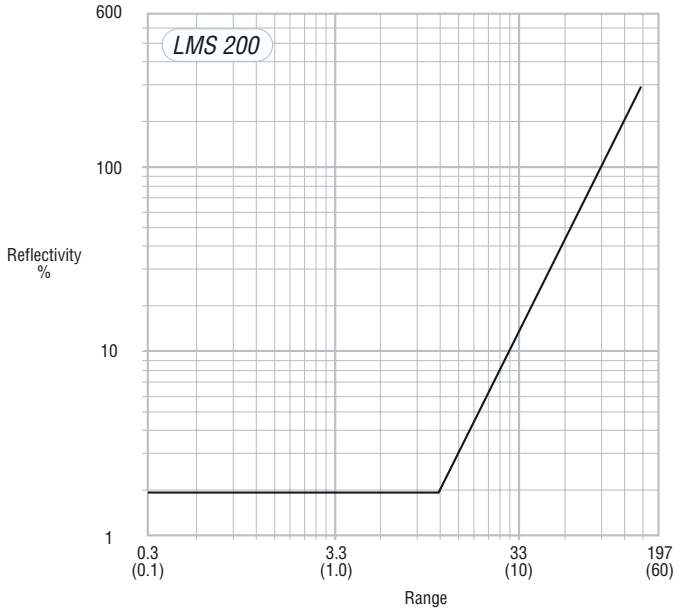

Material	Reflectivity
Cardboard, matte black	10%
Cardboard, grey	20%
Wood (raw pine, dirty)	40%
PVC, grey	50%
Paper, matte white	80%
Aluminum, anodized, black	110…150%
Steel, rust-free shiny	120…150%
Steel, very shiny	140…200%
Reflectors	> 2000%

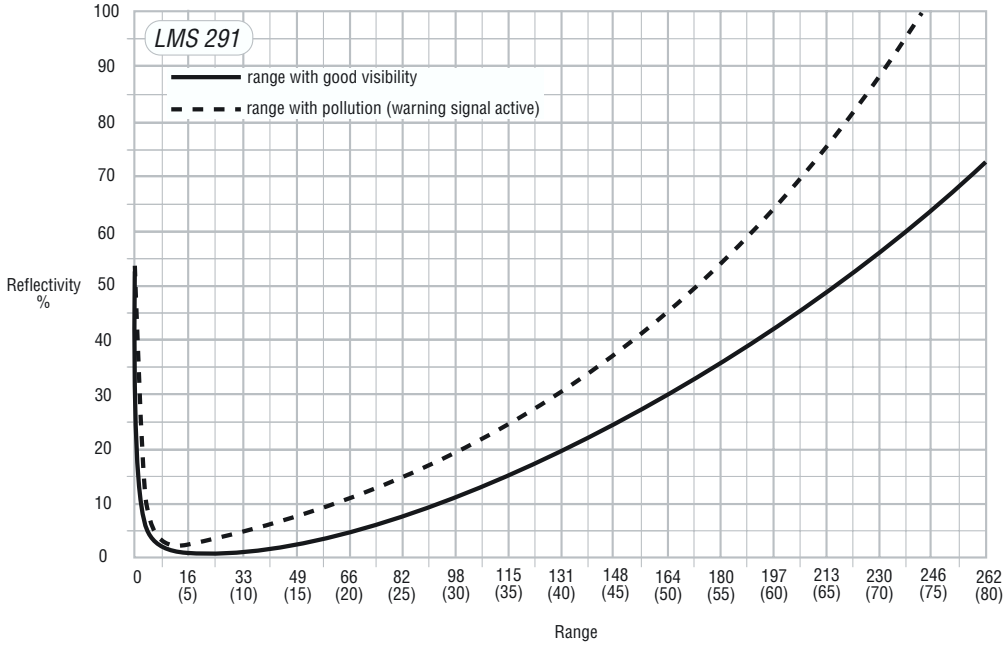

LMS 200/291

TECHNICAL SPECIFICATIONS

	LMS 200	LMS 291
General		
Range	Maximum 262.5 ft (80 m)	
Angular Resolution	0.25°/0.5°/1.0° (selectable)	
Response Time	53 ms/26 ms/13 ms	
Measurement Resolution	0.4 in (10 mm)	
System Error (environmental conditions: good visibility, Ta = 23°C (73°F), reflectivity 10%…10,000%)	Typ. ± 15 mm (mm-mode), range 1…8 m (3.2…26.2 ft) Typ. ± 4 cm (cm-mode), range 1…20 m (3.2…65.6 ft)	Typ. ± 60 mm (mm-mode), range 1…4 m (3.2…13.1 ft) Typ. ± 35 mm (mm-mode), range 4…20 m (13.1…65.6 ft)
Statistical Error, Standard Deviation (1 sigma)	Typ. 5 mm (at range ≤ 8 m / ≥ 10% reflectivity / ≤ 5 kLux)	Typ. 10 mm (at range 1…20 m / ≥ 10% reflectivity / ≤ 5 kLux)
Electrical		
Data Interface	RS 232/RS 422 (configurable)	
Transfer Rate	9.6/19.2/38.4/500 kBd	
Switching Outputs, Standard Variants	3 x PNP; typ. 24 V DC; OUT A, OUT B maximum 250 mA, OUT C maximum 100 mA	
Supply Voltage (scanner-electronics)	24 V DC ± 15% (maximum 500 mV ripple), current requirements maximum 1.8 A (including output load)	
Power Uptake	Approx. 20 W (without upload)	
Electrical Protection Class	Safety insulated, protection class 2	
Interference Resistance	According to IEC 801, part 2-4; EN 50081-1/50082-2	
Ambient Temperature (Operating / Storage)	32°…122°F (0…50°C) / -22°…158°F (-30°…70°C)	
Mechanical		
Enclosure Rating	IP 65	
Weight	Approx. 10.1 lb (4.5 kg)	
Dimensions	7.3 x 6.1 x 8.3 in (185 x 156 x 210 mm); with cables: 7.3 x 6.1 x 10.4 in (185 x 156 x 265 mm)	
Vibration Fatigue Limit	According to IEC 68 part 206, table 2c, frequency range 10…150 Hz, amplitude 0.35 mm or 5 g single impact IEC 68 part 2-27, table 2, 15 g/11 ms permanent vibration IEC 68 part 2-29, 10 g/16 ms Shock absorbers are recommended for heavy vibration and impact demands (e.g. AGV applications).	

MODELS AND PART NUMBERS

	LMS 200	LMS 291
Model	LMS 200-30106	LMS 291-S05
Part Number	1 015 850	1 018 028

DIMENSIONAL DRAWINGS *Dimensions in inches (mm)*

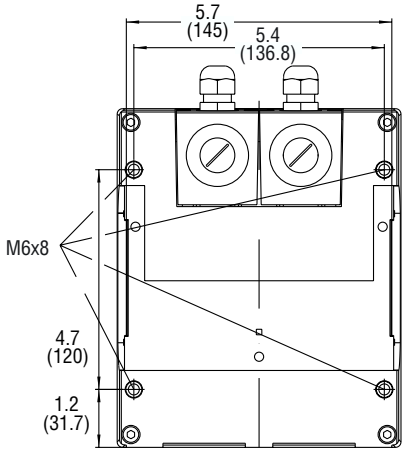

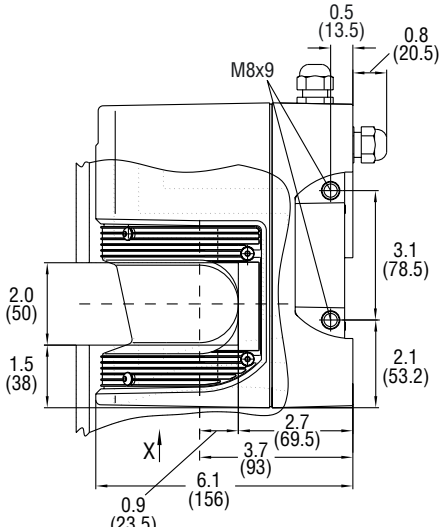

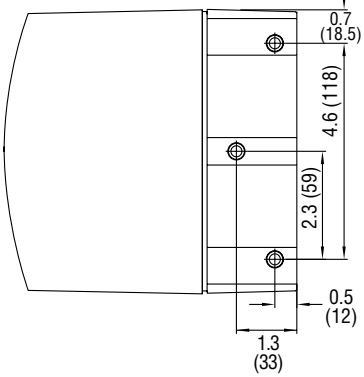

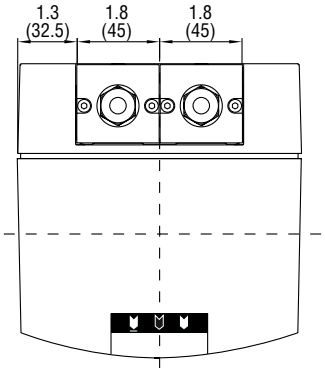

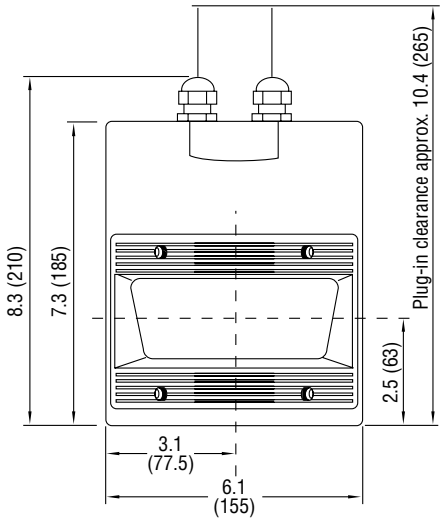

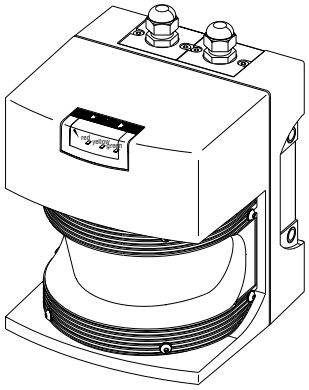

LMS 211

FEATURES

- 100° coverage
- Outdoor applications
- Integrated heating and fog correction
- Heated front window
- Contact-free measurement
- Target objects require no reflectors or markings
- Integrated lens shutter
- IP 67 rating
- Active system, no illumination of target objects necessary
- Measurements possible over long distances
- Three internally programmable monitoring fields assigned to three switching outputs

Model	Max. Scanning Angle	Resolution / Typical Measurement Accuracy	Range with 10% Reflectivity	Heating	Fog Correction
LMS 211	100°	± 1.3 in / 13…65 ft (± 35 mm / 4…20 m)	98.4 ft (30 m)	yes	yes

REFLECTIVITY RANGES *Range in feet (m)*

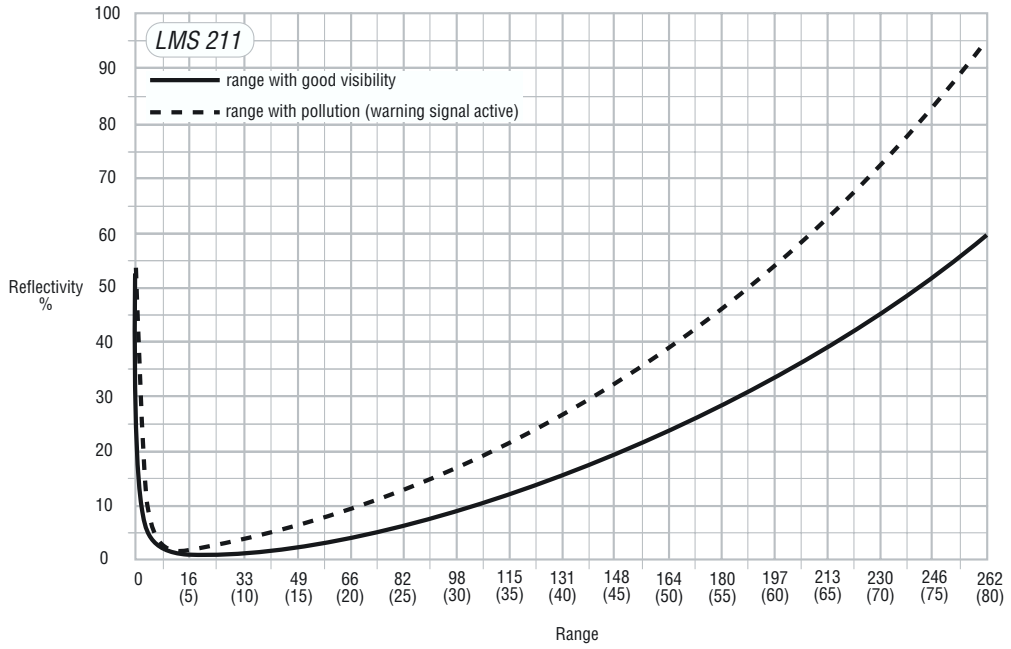

Material	Reflectivity
Cardboard, matte black	10%
Cardboard, grey	20%
Wood (raw pine, dirty)	40%
PVC, grey	50%
Paper, matte white	80%
Aluminum, anodized, black	110…150%
Steel, rust-free shiny	120…150%
Steel, very shiny	140…200%
Reflectors	> 2000%

LMS 211

TECHNICAL SPECIFICATIONS

	LMS 211
General	
Range	Maximum 262.5 ft (80 m)
Angular Resolution	0.25°/0.5°/1.0° (selectable)
Response Time	53 ms/26 ms/13 ms
Measurement Resolution	0.4 in (10 mm)
System Error (environmental conditions: good visibility, Ta = 23°C (73°F), reflectivity 10%…10,000%)	Typ. ± 60 mm (mm-mode), range 1…4 m (3.2…13.1 ft) Typ. ± 35 mm (mm-mode), range 4…20 m (13.1…65.6 ft)
Statistical Error, Standard Deviation (1 sigma)	Typ. 10 mm (at range 1…20 m / ≥ 10% reflectivity / ≤ 5 kLux)
Electrical	
Data Interface	RS 232/RS 422 (configurable)
Transfer Rate	9.6/19.2/38.4/500 kBd
Switching Outputs, Standard Variants	3 x PNP; typ. 24 V DC; OUT A, OUT B maximum 250 mA, OUT C maximum 100 mA
Switching Outputs, Relay Variants	OUT A, OUT B (relay) maximum switching voltage 48 V DC/26 V AC (protected low voltage, safe isolation from mains) maximum switching current 0.7 A; maximum switching power 30 W OUT C/weak (PNP) typical 24 V DC, maximum 100 mA
Supply Voltage (scanner-electronics)	24 V DC ± 15% (maximum 500 mV ripple), current requirements maximum 1.8 A (including output load)
Supply Voltage (heating)	24 V DC (maximum 6 V ripple); current requirements maximum 6 A (cyclic)
Power Uptake	Approx. 20 W (without output load), plus heating with approx. 120 W
Electrical Protection Class	Safety insulated, protection class 2
Interference Resistance	According to IEC 801, part 2-4; EN 50081-1/50082-2
Ambient Temperature (Operating / Storage)	-22…122°F (-30…50°C) (warming-up time approx. 120 min at T_{min}) / -22…158°F (-30…70°C)
Mechanical	
Enclosure Rating	IP 67
Weight	Approx. 19.8 lb (9 kg)
Dimensions	13.9 x 5.4 x 10.1 in (352 x 136 x 257 mm)
Vibration Fatigue Limit	According to IEC 68 part 206, table 2c, frequency range 10…150 Hz, amplitude 0.35 mm or 5 g single impact IEC 68 part 2-27, table 2, 15 g/11 ms permanent vibration IEC 68 part 2-29, 10 g/16 ms Shock absorbers are recommended for heavy vibration and impact demands (e.g. AGV applications).

MODELS AND PART NUMBERS

	LMS 211
Model	LMS 211-30206
Part Number	1 018 023

DIMENSIONAL DRAWINGS *Dimensions in inches (mm)*

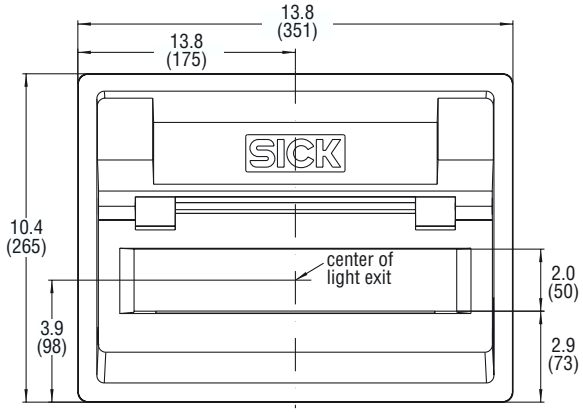

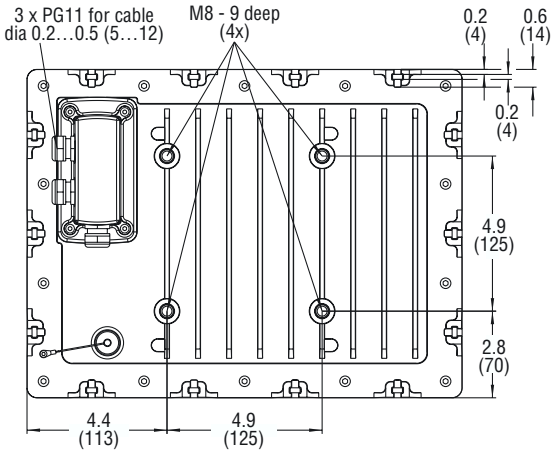

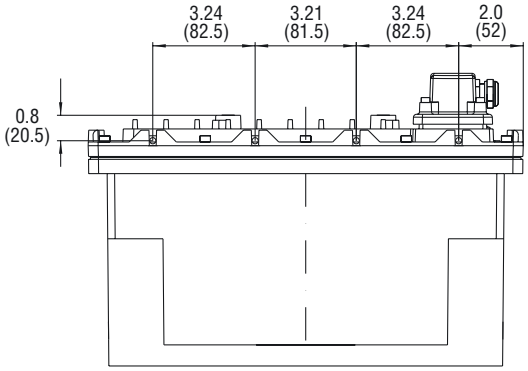

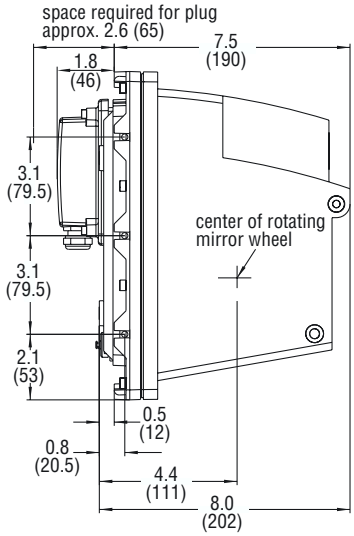

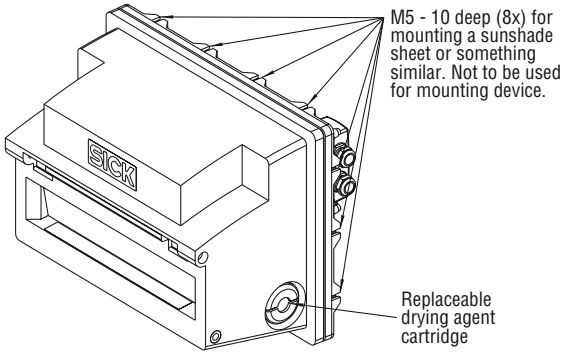

LMS 220/221

FEATURES

- 180° coverage
- Outdoor applications
- Integrated heating and fog correction (LMS 221)
- Contact-free measurement
- Target objects require no reflectors or markings
- High scanning frequency (up to 75 Hz)
- Active system, no illumination of target objects necessary
- Three internally programmable monitoring fields assigned to three switching outputs
- IP 67 rating
- Measurements possible over long distance

Model	Max. Scanning Angle	Resolution / Typical Measurement Accuracy	Range with 10% Reflectivity	Heating	Fog Correction
LMS 220	180°	± 0.6 in / 0…26 ft (± 15 mm / 1…8 m)	32.8 ft (10 m)	yes	no
LMS 221	180°	± 1.3 in / 13…65 ft (± 35 mm / 4…20 m)	98.4 ft (30 m)	yes	yes

REFLECTIVITY RANGES *Range in feet (m)*

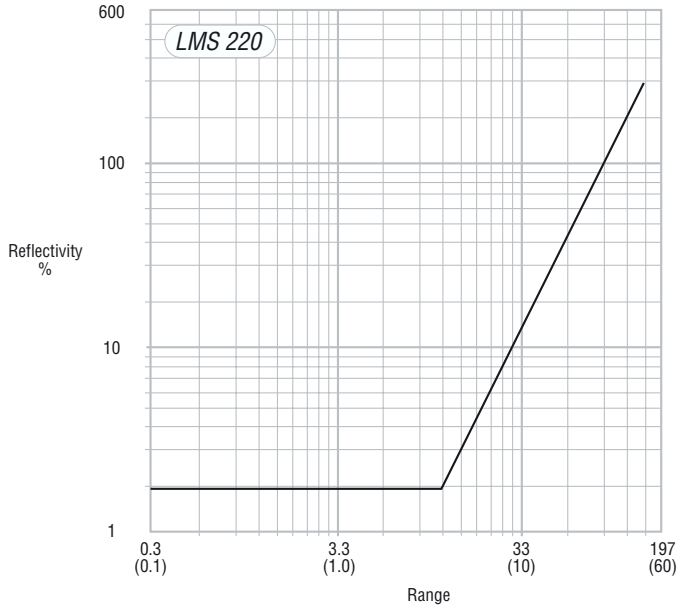

Material	Reflectivity
Cardboard, matte black	10%
Cardboard, grey	20%
Wood (raw pine, dirty)	40%
PVC, grey	50%
Paper, matte white	80%
Aluminum, anodized, black	110…150%
Steel, rust-free shiny	120…150%
Steel, very shiny	140…200%
Reflectors	> 2000%

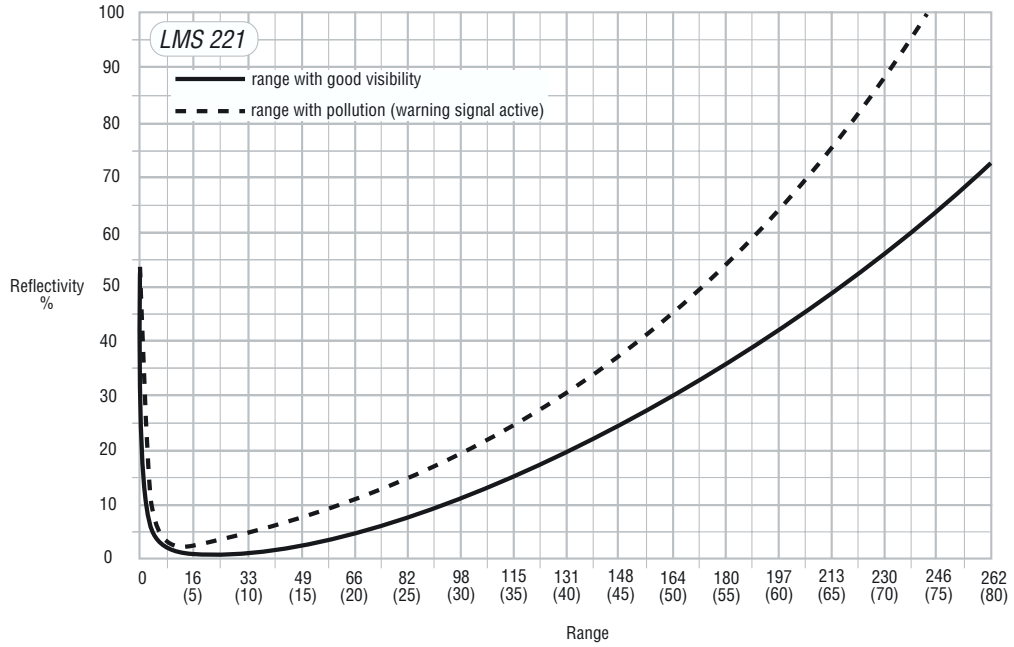

LMS 220/221

TECHNICAL SPECIFICATIONS

	LMS 220	LMS 221
General		
Range	Maximum 26.25 ft (80 m)	
Angular Resolution	0.25°/0.5°/1.0° (selectable)	
Response Time	53 ms/26 ms/13 ms	
Measurement Resolution	0.4 in (10 mm)	
System Error (environmental conditions: good visibility, Ta = 23°C (73°F), reflectivity 10%…10,000%)	Typ. ± 15 mm (mm-mode), range 1…8 m (3.2…26.2 ft) Typ. ± 4 cm (cm-mode), range 1…20 m (3.2…65.6 ft)	Typ. ± 60 mm (mm-mode), range 1…4 m (3.2…13.1 ft) Typ. ± 35 mm (mm-mode), range 4…20 m (13.1…65.6 ft)
Statistical Error, Standard Deviation (1 sigma)	Typ. 5 mm (at range ≤ 8 m / ≥ 10% reflectivity / ≤ 5 kLux)	Typ. 10 mm (at range 1…20 m / ≥ 10% reflectivity / ≤ 5 kLux)
Electrical		
Data Interface	RS 232/RS 422 (configurable)	
Transfer Rate	9.6/19.2/38.4/500 kBd	
Switching Outputs, Standard Variants	3 x PNP; typ. 24 V DC; OUT A, OUT B maximum 250 mA, OUT C maximum 100 mA	
Switching Outputs, Relay Variants (available in LMS 221 only)	OUT A, OUT B (relay) maximum switching voltage 48 V DC/26 V AC (protected low voltage, safe isolation from mains) maximum switching current 0.7 A; maximum switching power 30 W OUT C/weak (PNP) typical 24 V DC, maximum 100 mA	
Supply Voltage (Scanner-electronics)	24 V DC ± 15% (maximum 500 mV ripple), current requirements maximum 1.8 A (including output load)	
Supply Voltage (Heating)	24 V DC (maximum 6 V ripple); current requirement maximum 6 A (cyclic)	
Power Uptake	Approx. 20 W (without output load)	
Electrical Protection Class	Safety insulated, protection class 2	
Interference Resistance	According to IEC 801, part 2-4; EN 50081-1/50082-2	
Ambient Temperature (Operating / Storage)	-22…122°F (-30…50°C) (warming up time approx. 120 min at T_{min}) / -22…158°F (-30…70°C)	
Mechanical		
Enclosure Rating	IP 67	
Weight	Approx. 19.8 lb (9 kg)	
Dimensions	7.3 x 6.1 x 8.3 in (185 x 156 x 210 mm); with cables: 7.3 x 6.1 x 10.4 in (185 x 156 x 265 mm)	
Vibration Fatigue Limit	According to IEC 68 part 206, table 2c, frequency range 10…150 Hz, amplitude 0.35 mm or 5 g single impact IEC 68 part 2-27, table 2, 15 g/11 ms permanent vibration IEC 68 part 2-29, 10 g/16 ms Shock absorbers are recommended for heavy vibration and impact demands (e.g. AGV applications).	

MODELS AND PART NUMBERS

	LMS 220	LMS 221
Model	LMS 220-30106	LMS 221-30206
Part Number	1 015 945	1 018 022

DIMENSIONAL DRAWINGS *Dimensions in inches (mm)*

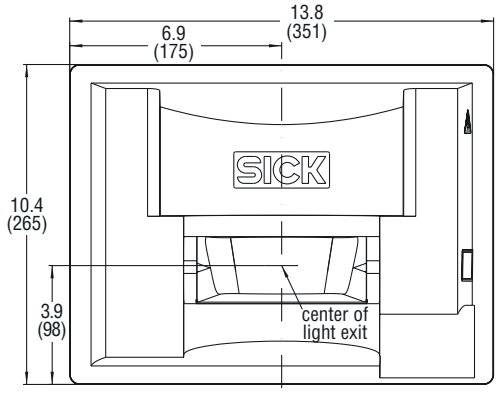

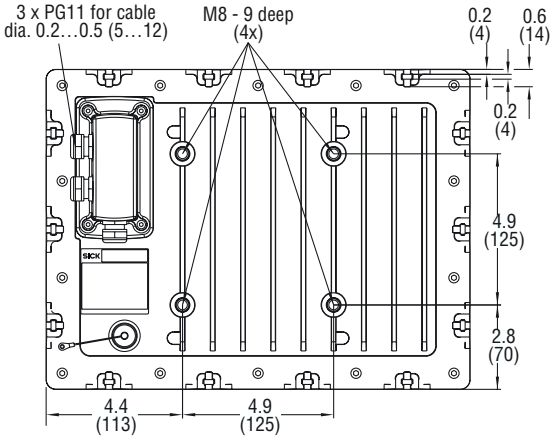

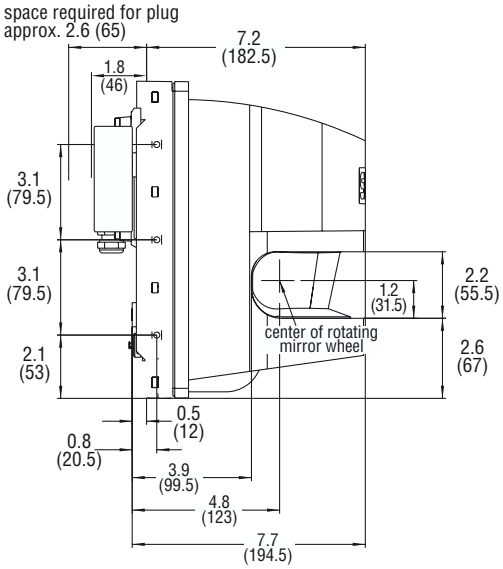

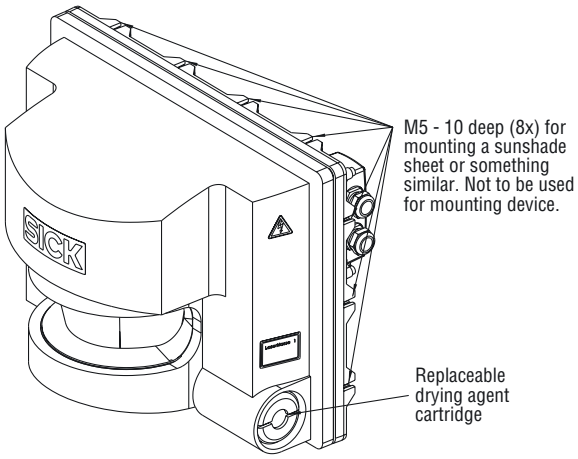

LMS/LMI Software

FEATURES

- Transfer of configurations and fields
- Define measurement range
- Check settings
- Monitor fields
- Receive, save, edit configurations
- System diagnosis

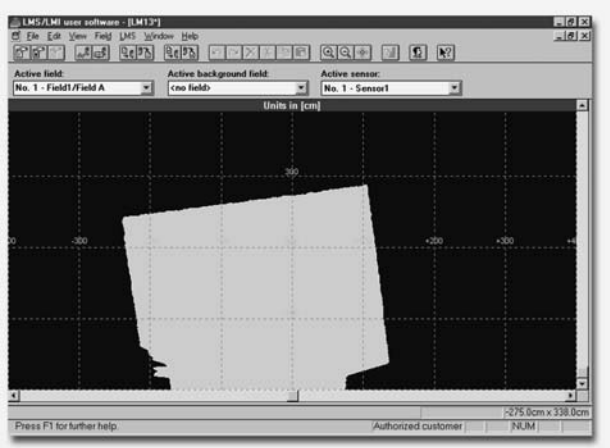

	LMS/LMI Software
Part Number	7 025 784
Computer	Minimum IBM 486, or true 486 IBM compatible
Hard Disk Space	4 MB of available disk space
Disk Drive	One 3.5" high density drive
Memory Requirements	Recommended 8 MB RAM
System Software	Windows™ 3.x, 95 or 98
Mouse	Optional but recommended
LMI Interface / Compatibility	All LMS laser measurement systems, LMI 200, LMI 400

MST Software

FEATURES

- Performs measurement functions for LMS laser scanners
- Two pre-installed drivers for real time communication with up to two laser scanners
- Functions library includes filter functions such as cutting out irrelevant measurement zones
- Tiered structure allows for integration of new function blocks of software drivers for later applications
- Basic routines necessary for preparing measurement data are already installed

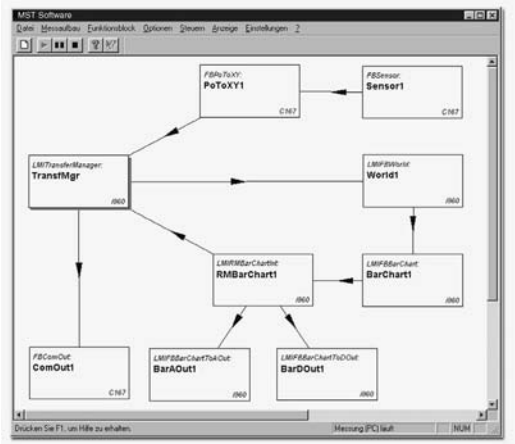

TECHNICAL SPECIFICATIONS

	MST Software
Part Number	1 016 363
Computer	Pentium 133 MHz
Hard Disk Space	4 MB of available disk space
Disk Drive	One CD ROM drive
Memory Requirements	Recommended 16 MB RAM
System Software	Windows™ 95, 98 or NT
Mouse	Optional but recommended
LMI Interface / Compatibility	LMI 200

Application-specific component	CUSTOMER	20-30%
MST 200 Software tool for a standard PC or SICK-specific hardware, the LMI 200 Software library: • Integrated software and hardware communications driver • Definition of an application-specific measurement zone • Transformation of coordinates • Combination of measurement data from 2 sensors • Pre-processing of sensor measurement data: -Plausibility check -Averaging of measured values -Suppression of irrelevant measurement zones -Pixel-oriented evaluation of measurements (filtering out rain, snow, etc) -And many more! Visualization: • Display of measurement data in application-specific coordinate system	SICK	70-80%

NOTE: Users of MST 200 will need to have knowledge of MS Visual C++ programming.

PART NUMBERS & ACCESSORIES

FIXED POSITION SCANNERS

CLP 100

Line Scanners

Part #	Model	Description
1 018 333	CLP 100-0010	Front emitting line scanner, open cable end
1 018 334	CLP 100-2110	Side emitting line scanner, open cable end
1 018 331	CLP 100-0010	Front emitting line scanner, RS 232
1 018 332	CLP 100-2010	Side emitting line scanner, RS 232

Setup Software

Part #	Model	Description
2 021 674	CLP Setup Software	Windows™-based CLP programming software

CLV 410/412/414

Line Scanners

Part #	Model	Description
1 015 421	CLV 410-0010	Front emitting line scanner, standard / Host Port RS 232, RS 422/485
1 017 534	CLV 410-2010	Side emitting line scanner, standard / Host Port RS 232, RS 422/485
1 017 527	CLV 412-0010	Front emitting line scanner, high density / Host Port RS 232, RS 422/485
1 017 538	CLV 412-2010	Side emitting line scanner, high density / Host Port RS 232, RS 422/485
1 017 368	CLV 414-0010	Front emitting line scanner, close range / Host Port RS 232, RS 422/485
1 017 396	CLV 414-2010	Side emitting line scanner, close range / Host Port RS 232, RS 422/485

Raster Scanners

Part #	Model	Description
1 015 427	CLV 410-1010	Front emitting raster scanner, standard / Host Port RS 232, RS 422/485
1 017 536	CLV 410-3010	Side emitting raster scanner, standard / Host Port RS 232, RS 422/485
1 017 528	CLV 412-1010	Front emitting raster scanner, high density / Host Port RS 232, RS 422/485
1 017 540	CLV 412-3010	Side emitting raster scanner, high density / Host Port RS 232, RS 422/485
1 016 767	CLV 414-1010	Front emitting raster scanner, close range / Host Port RS 232, RS 422/485
1 016 831	CLV 414-3010	Side emitting raster scanner, close range / Host Port RS 232, RS 422/485

Power Supplies

Part #	Model	Description
7 023 293	PS 52-0000	24 V DC required
7 023 770	PS 52-1000	115 / 230 V AC line voltage with 6 ft US line cord

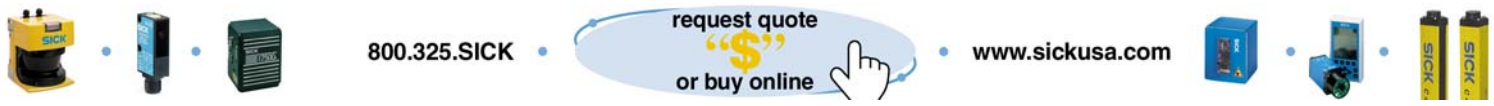

CLV 410/412/414

Brackets

Part #	Model	Description
2 020 077	MB-CLV410S	Small right angle bracket for the CLV 410
2 020 078	MB-CLV410L	Large right angle bracket for the CLV 410
7 024 011	MB-W45A-43X-QR	Ball and socket bracket with quick release

Cables

Part #	Model	Description
6 010 075	KP-DB15H-2E	15-pin F to 15-pin M, straight through 2 m long cable
7 021 851	KP-DB09-2E	9-pin F to 9-pin M, straight through 2 m long cable (programming cable)
7 021 849	KP-DB09-3E	9-pin F to 9-pin M, straight through 3 m long cable

Setup Software

Part #	Model	Description
7 026 126	CLV Setup Software-CD	Windows™-based CLV programming software

CLV 420/421/422

Line Scanners

Part #	Model	Description
1 022 031	CLV 420-0010	Front emitting line scanner / software selectable Host Port RS 232, RS 422/485
1 022 033	CLV 420-2010	Side emitting line scanner / software selectable Host Port RS 232, RS 422/485
1 022 547	CLV 421-0010	Front emitting line scanner / software selectable Host Port RS 232, RS 422/485
1 022 617	CLV 421-2010	Side emitting line scanner / software selectable Host Port RS 232, RS 422/485
1 022 548	CLV 422-0010	Front emitting line scanner / software selectable Host Port RS 232, RS 422/485
1 022 620	CLV 422-2010	Side emitting line scanner / software selectable Host Port RS 232, RS 422/485

Raster Scanners

Part #	Model	Description
1 022 032	CLV 420-1010	Front emitting raster scanner / software selectable Host Port RS 232, RS 422/485
1 022 034	CLV 420-3010	Side emitting raster scanner / software selectable Host Port RS 232, RS 422/485
1 022 616	CLV 421-1010	Front emitting raster scanner / software selectable Host Port RS 232, RS 422/485
1 022 618	CLV 421-3010	Side emitting raster scanner / software selectable Host Port RS 232, RS 422/485
1 022 619	CLV 422-1010	Front emitting raster scanner / software selectable Host Port RS 232, RS 422/485
1 022 621	CLV 422-3010	Side emitting raster scanner / software selectable Host Port RS 232, RS 422/485

PART NUMBERS & ACCESSORIES

CLV 420/421/422

Power Supplies

Part #	Model	Description
7 024 494	PS 53-1000	115/230 V AC line voltage with 6 ft US line cord
7 024 495	PS 53-0000	24 V DC required

Brackets

Part #	Model	Description
2 020 077	MB-CLV410S	Small right angle bracket
2 020 078	MB-CLV410L	Large right angle bracket

Cables

Part #	Model	Description
6 010 075	KP-DB15H-2E	15-pin F to 15-pin M, straight through 2 m long cable
7 021 851	KP-DB09-2E	9-pin F to 9-pin M, straight through 2 m long cable (programming cable)
7 021 849	KP-DB09-3E	9-pin F to 9-pin M, straight through 3 m long cable

Setup Software

Part #	Model	Description
7 026 126	CLV Setup Software-CD	Windows™-based CLV programming software

CLV 430/431/432

Line Scanners

Part #	Model	Description
1 017 585	CLV 430-0010	Front emitting line scanner, standard / software selectable Host Port RS 232, RS 422/485
1 017 622	CLV 431-0010	Front emitting line scanner, mid-range / software selectable Host Port RS 232, RS 422/485
1 016 746	CLV 431-2010	Side emitting line scanner, mid-range / software selectable Host Port RS 232, RS 422/485
1 017 623	CLV 432-0010	Front emitting line scanner, close range / software selectable Host Port RS 232, RS 422/485
1 016 748	CLV 432-2010	Side emitting line scanner, close range / software selectable Host Port RS 232, RS 422/485

Raster Scanners

Part #	Model	Description
1 016 705	CLV 430-1010	Front emitting raster scanner, standard / software selectable Host Port RS 232, RS 422/485
1 016 679	CLV 431-1010	Front emitting raster scanner, mid-range / software selectable Host Port RS 232, RS 422/485
1 016 747	CLV 431-3010	Side emitting raster scanner, mid-range / software selectable Host Port RS 232, RS 422/485
1 016 680	CLV 432-1010	Front emitting raster scanner, close range / software selectable Host Port RS 232, RS 422/485
1 016 749	CLV 432-3010	Side emitting raster scanner, close range / software selectable Host Port RS 232, RS 422/485

CLV 430/431/432

Oscillating Mirror Scanners

Part #	Model	Description
1 017 981	CLV 430-6010	Oscillating mirror scanner, standard / software selectable Host Port RS 232, RS 422/485
1 017 982	CLV 431-6010	Oscillating mirror scanner, mid-range / software selectable Host Port RS 232, RS 422/485
1 017 983	CLV 432-6010	Oscillating mirror scanner, close range / software selectable Host Port RS 232, RS 422/485

Power Supplies

Part #	Model	Description
7 024 494	PS 53-1000	115/230 V AC line voltage with 6 ft US line cord
7 024 495	PS 53-0000	24 V DC required
7 024 454	PS 51-1000-DNET-MICRO	115/230 V AC DeviceNet unit with micro connector
7 024 686	PS 51-0000-DNET-MINI	DeviceNet unit with mini connector, 24 V DC required

Brackets

Part #	Model	Description
2 020 410	CLV 43X/44X BRACKET	Right angle bracket
7 024 011	MB-W45A-43X-QR	Ball and socket bracket with Quick Release
2 022 564	MB-CLV-43X/44X/45X	“U”-shaped bracket

Cables

Part #	Model	Description
6 010 075	KP-DB15H-2E	15-pin F to 15-pin M, straight through 2 m long cable
7 021 851	KP-DB09-2E	9-pin F to 9-pin M, straight through 2 m long cable (programming cable)
7 021 849	KP-DB09-3E	9-pin F to 9-pin M, straight through 3 m long cable

Setup Software

Part #	Model	Description
7 026 126	CLV Setup Software-CD	Windows™-based CLV programming software

CLV 440/442

Line Scanners

Part #	Model	Description
1 017 588	CLV 440-0010	Front emitting line scanner, standard / software selectable Host Port RS 232, RS 422/485
1 017 595	CLV 442-0010	Front emitting line scanner, high density / software selectable Host Port RS 232, RS 422/485

PART NUMBERS & ACCESSORIES

CLV 440/442

Oscillating Mirror Scanners

Part #	Model	Description
1 017 984	CLV 440-6010	Oscillating mirror scanner, standard / software selectable Host Port RS 232, RS 422/485

Power Supplies

Part #	Model	Description
7 024 494	PS 53-1000	115/230 V AC line voltage with 6 ft US line cord
7 024 495	PS 53-0000	24 V DC required
7 024 454	PS 51-1000-DNET-MICRO	115/230 V AC DeviceNet unit with micro connector
7 024 686	PS 51-0000-DNET-MINI	DeviceNet unit with mini connector, 24 V DC required

Brackets

Part #	Model	Description
2 020 410	CLV 43X/44X BRACKET	Right angle bracket
7 024 011	MB-W45A-43X-QR	Ball and socket bracket with Quick Release
2 022 564	MB-CLV-43X/44X/45X	“U”-shaped bracket

Cables

Part #	Model	Description
6 010 075	KP-DB15H-2E	15-pin F to 15-pin M, straight through 2 m long cable
7 021 851	KP-DB09-2E	9-pin F to 9-pin M, straight through 2 m long cable (programming cable)
7 021 849	KP-DB09-3E	9-pin F to 9-pin M, straight through 3 m long cable

Setup Software

Part #	Model	Description
7 026 126	CLV Setup Software-CD	Windows™-based CLV programming software

CiMAX® 7500A/7550A/7555A

Line Scanners

Part #	Model	Description
	7500A	CiMAX 7500A front emitting line scanner
**Model Configuration: 7500A-A B C D E F (configuration options follow)*		
	7550A	CiMAX 7550A front emitting line scanner
**Model Configuration: 7550A-A B C D E F (configuration options follow)*		
	7555A	CiMAX 7555A front emitting line scanner
**Model Configuration: 7555A-A B C D E F (configuration options follow)*		

CiMAX® 7500A/7550A/7555A

Scan Line and Angle Options: A

Part #	Model	Description
A	1	10-sided, 60°, diamond machined polygon
A	3	10-sided, discrete raster 1.5 in at 6.0 in
A	4	Front emitting raster scanner / software selectable Host Port RS 232, RS 422/485

Laser Options: B

Part #	Model	Description
B	1	4.0 in (101.6 mm) / 5 mW laser diode
B	2	8.0 in (203.2 mm) / 10 mW laser diode
B	3	14.0 in (355.6 mm) / 10 mW laser diode
B	4	18.0 in (457.2 mm) / 10 mW laser diode
B	5	26.5 in (673.1 mm) / 10 mW laser diode
B	6	28.0 in (711.2 mm) / 10 mW laser diode
B	7	36.0 in (914.4 mm) / 10 mW laser diode
B	8	13.0 in (330.2 mm) / 10 mW laser diode

Beam Diverger/ORB Options: C

Part #	Model	Description
C	4	No beam diverger, standard optical receiver board
C	5	9.8 in (250 mm) diverger, standard optical receiver board
C	6	7.9 in (200 mm) diverger, standard optical receiver board

Operation Voltage & Communication Options: D

Part #	Model	Description
D	1	No Ethernet - for use with 888 or 895 interface box
D	2	No Ethernet - for use with basic interface box
D	3	SDS interface - requires 888 or 895 I/O box
D	4	DeviceNet interface - requires 888 or 895 I/O box
D	5	Ethernet, 10 base 2 - requires 888 or 895 I/O box
D	6	Ethernet, RJ45 - requires 888 or 895 I/O box

Memory Options: E

Part #	Model	Description
E	5	256 K memory, no CIX®
E	6	1 MB memory, no CIX®
E	7	256 K memory, with CIX®
E	8	1 MB memory, with CIX®

PART NUMBERS & ACCESSORIES

CiMAX® 7500A/7550A/7555A

Adjustment Options: F

Part #	Model	Description
F	2	Custom calibration (application specific)
F	3	High resolution calibration
F	9	Special - PCR required

Accessories

Part #	Model	Description
	A4-62877-1	Offset mounting adapter
	A4-62879-1	Machined plate mounting adapter
	A4-62883-1	3-way mounting adapter

Interface Boxes

Part #	Model	Description
	888	Interface box OMNI CIX-L, OMNI CIX-M, CiMAX 7500A, CiMAX 7600

**Model Configuration: 888-A B C D (configuration options follow)*

Product and Cable Length Options: A

Part #	Model	Description
A	1	OMNI CIX-L, with 26 ft (7.9 m) cable
A	2	OMNI CIX-M, with 12 ft (3.7 m) cable
A	3	CiMAX 7500A/7800, with 7 ft (2.1 m) cable
A	4	CiMAX 7500A/7800, with 15 ft (4.6 m) cable
A	5	CiMAX 7500A/7800, with 30 ft (9.1 m) cable
A	6	CiMAX 7500A/7800, with 7 ft (2.1 m) cable master/slave
A	7	CiMAX 7500A/7800, master (TMS)
A	8	CiMAX 7500A/7800, slave (TMS)
A	9	OMNI master/slave

Optically Isolate Inputs Options: B

Part #	Model	Description
B	1	Not installed
B	2	Quantity 8 installed

I/O Expansion Board Options: C

Part #	Model	Description
C	1	Not installed
C	2	PIC sonar installed
C	5	PIC height sensing installed
C	6	PIC tach multiplier installed

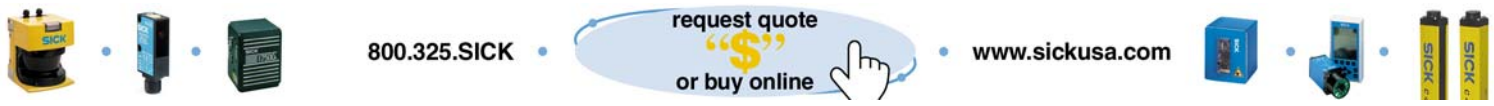

CiMAX® 7500A/7550A/7555A

Light Tree Options: D

Part #	Model	Description
D	1	Not installed
D	2	4 lite slim installed
D	3	4 lite large installed

Utility Interface Box

Part #	Model	Description
	A1-63207-1	Utility I/F box (12 V DC output, 15 W)
	A1-63208-1	Utility Starnode I/F box (12 V DC output, 15 W)
	A1-63345-1	"Y" cable (7500A/76XX to utility box)
	A1-63207-2	Utility interface box with tach input (12 V DC output, 15 W)
	A1-63207-3	Utility interface box 24 V DC input
	A1-63345-2	7600 utility "Y" cable (A1-63207-1 & A1-63207-3)

Accessories

Part #	Model	Description
	936-0021-6	Opto AC input module IAC-15
	936-0021-7	Opto AC output module OAC-15
	936-0021-10	Opto DC input module ICD-15
	936-0021-11	Opto DC output module ODC-15
	936-0021-12	Opto AC input module IAC-15 A 220 V
	936-0021-13	Opto AC output module OAC-15A 220 V
	A1-63172-1	Light tree kit Slim 4
	A1-63202-1	Light tree kit Large 4
	A1-63173-1	External speaker kit
	971-0161-1	CiMAX 1400 hand held setup / diagnostic terminal

CLV 450

Line Scanners

Part #	Model	Description
1 018 556	CLV 450-0010	Front emitting line scanner, standard / software selectable Host Port RS 232, RS 422/485

Oscillating Mirror Scanners

Part #	Model	Description
1 019 218	CLV 450-6010	Oscillating mirror scanner, standard / software selectable Host Port RS 232, RS 422/485

PART NUMBERS & ACCESSORIES

CLV 450

Power Supplies

Part #	Model	Description
7 024 494	PS 53-1000	115/230 V AC line voltage with 6 ft US line cord
7 024 495	PS 53-0000	24 V DC required
7 024 454	PS 51-1000-DNET-MICRO	115/230 V AC DeviceNet unit with micro connector
7 024 686	PS 51-0000-DNET-MINI	DeviceNet unit with mini connector, 24 V DC required

Brackets

Part #	Model	Description
2 020 410	CLV 43X/44X BRACKET	Right angle bracket
7 024 011	MB-W45A-43X-QR	Ball and socket bracket with Quick Release
2 022 564	MB-CLV-43X/44X/45X	“U”-shaped bracket

Cables

Part #	Model	Description
6 010 075	KP-DB15H-2E	15-pin F to 15-pin M, straight through 2 m long cable
7 021 851	KP-DB09-2E	9-pin F to 9-pin M, straight through 2 m long cable (programming cable)
7 021 849	KP-DB09-3E	9-pin F to 9-pin M, straight through 3 m long cable

Setup Software

Part #	Model	Description
7 026 126	CLV Setup Software-CD	Windows™-based CLV programming software

CLV 490

Line Scanners

Part #	Model	Description
1 016 958	CLV 490-0010	Line scanner, standard / software selectable Host Port RS 232, RS 422/485
1 016 960	CLV 490-0011	Line scanner, standard / software selectable Host Port RS 232, RS 422/485 with heater
1 019 311	CLV 490-2010	Line scanner, high density / software selectable Host Port RS 232, RS 422/485
1 018 872	CLV 490-6010	Line scanner, low density / software selectable Host Port RS 232, RS 422/485
1 019 095	CLV 490-6011	Line scanner, low density / software selectable Host Port RS 232, RS 422/485 with heater

Oscillating Mirror Scanners

Part #	Model	Description
1 016 959	CLV 490-1010	Oscillating mirror scanner, standard / software selectable Host Port RS 232, RS 422/485
1 016 961	CLV 490-1011	Oscillating mirror scanner, standard / software selectable Host Port RS 232, RS 422/485 with heater
1 019 313	CLV 490-3010	Oscillating mirror scanner, high density / software selectable Host Port RS 232, RS 422/485
1 019 094	CLV 490-7010	Oscillating mirror scanner, low density / software selectable Host Port RS 232, RS 422/485
1 019 096	CLV 490-7011	Oscillating mirror scanner, low density / software selectable Host Port RS 232, RS 422/485 with heater





CLV 490

Power Supplies

Part #	Model	Description
7 025 512	PS 56-1000	115/230 V AC line voltage with 6 ft US line cord (relay module optional)
7 025 513	PS 56-0000	24 V DC required (relay module optional)
7 026 160	RELAY 54/56	Relay module for PS 56
7 024 454	PS 51-1000-DNET-MICRO	115/230 V AC DeviceNet unit with micro connector
7 024 686	PS 51-0000-DNET-MINI	DeviceNet unit with mini connector, 24 V DC required

Brackets

Part #	Model	Description
2 011 436	MB-W45A	Ball and socket bracket
7 023 285	MB-W45A-QR	Ball and socket bracket with Quick Release
2 013 824	MB-CLV-S	Angle bracket, single
2 013 825	MB-CLV-D	Angle bracket, double

Cables

Part #	Model	Description
6 010 075	KP-DB15H-2E	15-pin F to 15-pin M, straight through 2 m long cable
7 026 219	KP-DB15H-3E	15-pin F to 15-pin M, straight through 3 m long cable
7 023 386	KP-DB15M/09F-2E	15-pin M to 9-pin F, CLV I/O Port to PS 51, 2 m long cable
7 023 387	KP-DB15M/09M-3E	15-pin M to 9-pin F, CLV I/O Port to PS 51, 3 m long cable
7 023 388	KP-DB15F/09M-2E	15-pin F to 9-pin M, CLV Term/Host Port to PS 51, 2 m long cable
7 023 389	KP-DB15F/09M-3E	15-pin F to 9-pin M, CLV Term/Host Port to PS 51, 3 m long cable
7 021 851	KP-DB09-2E	9-pin F to 9-pin M, straight through 2 m long cable (programming cable)
2 020 981	KP-DB15/LEADS-3M-EE	Cloning plug cable - 3 m to two 15-conductor bare leads
2 020 622	KP-DB9/2-2M-EE	Cloning plug cable - 2 m to two 9-pin connectors
2 020 307	KP-DB15/2-DB15-3M-EE	Cloning plug cable - 3 m to two 15-pin connectors
2 021 044	KP-DB15-15M-EE	15 m cable from CLV to bare leads with cloning module - single cable (limited pins)
2 021 298	KP-DB15/DB15-3M-IP65-COLD	3 m low temp cable without EEPROM
2 021 299	KP-DB15-10M-IP65 COLD	10 m low temp cable without EEPROM

Setup Software

Part #	Model	Description
7 026 126	CLV Setup Software-CD	Windows™-based CLV programming software

PART NUMBERS & ACCESSORIES

CLV Accessories

PHOTOELECTRIC PRESENCE-SENSING TRIGGERS

Reflex Photoelectric - *PNP output (mounting bracket included, must order reflector separately except for WL 250 & WL 150)*

Part #	Model	Description
1 010 740	WL 12-P4381	Reflex switch, metal housing, range dependent on reflector used, 4-pin M12 quick-disconnect
7 023 047	WL 2000-B5300	Reflex photoelectric, polarized PNP/NPN, alarm, red, 15 m range (PL 80A), 5-pin M12
6 010 189	WL 170-P132	Reflex switch, sensing range 0.1…2.5 m, connecting cable 2 m long
7 023 829	WL 1000-P132	Reflex photoelectric, polarized, PNP, red, 4.2 m range (PL 80A), 2 m cable
7 024 632	WL 1000-P139	Reflex photoelectric, polarized, PNP, red, 4.2 m range (PL 80A), 9 m cable
7 023 830	WL 1000-P430	Reflex photoelectric, polarized, PNP, red, 4.2 m range (PL 80A), 4-pin M12 connector

Proximity Photoelectric - *with adjustable background suppression, PNP output (mounting bracket must be ordered separately)*

Part #	Model	Description
1 011 017	WT 12-P4381	Proximity sensor, metal housing, sensing range 20…130 mm, 4-pin M12 quick-disconnect
1 015 082	WT 27-2F430	Proximity sensor, plastic housing, sensing range 100…500 mm, 4-pin M12 quick-disconnect
1 011 461	WT 24-B4101	Proximity sensor, metal housing, sensing range 200…2000 mm, 4-pin M 12 quick-disconnect

Reflectors - *for WL 12*

Part #	Model	Description
1 002 314	PL 30A	30 x 50 mm, screw-mounted, operating range 0…1.5 m
1 000 132	PL 50A	48 mm hexagon, screw-mounted, operating range 1…2 m
1 003 865	PL 80A	80 x 80 mm, screw-mounted, operating range 1…3 m

Brackets

Part #	Model	Description
2 012 938	MB-W12S	Mounting bracket (small) for W12 series
2 015 248	MB-W24	Mounting bracket for W24 series
2 009 122	MB-W27	Mounting bracket for W27 series
7 022 981	MB-W2000	Mounting bracket for W2000, metal housing

Cables

Part #	Model	Description
7 020 020	KD4-SIM122	Straight 4-pin M12 connector to bare leads for connection to power supply, 2 m long
7 020 678	KD4-SIM125	Straight 4-pin M12 connector to bare leads for connection to power supply, 5 m long
7 021 913	KP-HT01-2	Straight 4-pin M12 connector to 9-pin D-Sub connection to CLV or power supply, 2 m long
7 021 914	KP-HT01-5	Straight 4-pin M12 connector to 9-pin D-Sub connection to CLV or power supply, 5 m long





OMNI DIRECTIONAL & TUNNEL SCANNING SYSTEMS

CLX 490

Omni Directional Scanners

Part #	Model	Description
1 019 318	CLX 490-0010	Integrated omni directional scanner / software selectable RS 232, RS 422/485

Brackets

Part #	Model	Description
2 022 996	CLX 490 MTG Bracket	Angle bracket, single

NOTE: ALL OTHER CLX 490 ACCESSORIES SAME AS CLV 490 ACCESSORIES SHOWN ON PREVIOUS PAGE

Integrated Omni Scanning Systems

Part #	Description
1 019 691	OPS 400, integrated omni scanner (standard density)
1 019 692	OPS 400, integrated omni scanner (high density)
1 019 693	OPS 400, integrated omni scanner (low density)
910-4-ABCDE	OMNI-L Slim X, integrated omni directional scanner with slim X-pattern for tire reading applications
920-4-ABCDEF	OMNI-2110, integrated maximum performance omni directional scanner (available as single or dual “X”)

Standard OPS (Omni Portal Systems)

(Includes standard range CLV 490 scanners, cables/connectors, mounting hardware, cloning modules, controller/power supply, light switch)

Model #	Description
OPS290	OPS 290 modular omni scanning system, 2 scan heads, 90 degree pattern
OPS360	OPS 360 modular omni scanning system, 3 scan heads, 60 degree pattern
OPS490	OPS 490 modular omni scanning system, 4 scan heads, 90 degree pattern
OPS560	OPS 560 modular omni scanning system, 5 scan heads, 60 degree pattern

Advanced OPS (Omni Portal Systems)

(Includes standard range CLV 490 scanners, cables/connectors, mounting hardware, cloning modules, controller/power supply, light switch)

Model #	Description
OPS6X0	OPS 6X0 modular omni scanning system, 6 scan heads
OPS7X0	OPS 7X0 modular omni scanning system, 7 scan heads
OPS8X0	OPS 8X0 modular omni scanning system, 8 scan heads
OPS9X0	OPS 9X0 modular omni scanning system, 9 scan heads
OPS10X0	OPS 10X0 modular omni scanning system, 10 scan heads
OPS12X0	OPS 12X0 modular omni scanning system, 12 scan heads
OPS14X0	OPS 14X0 modular omni scanning system, 14 scan heads

PART NUMBERS & ACCESSORIES

ALIS (Airport Luggage Identification Systems)

(Includes scanners, cables/connectors, mounting hardware, cloning modules, controller/power supply, light switch)

Model #	Description
TCT750/6	TCT750/6, T-code tray, 6 scan head modular scanning system
TCT750/8	TCT750/8, T-code tray, 8 scan head modular scanning system
TCB750/8	TCB750/8, T-code belt, 8 scan head modular scanning system
TCB750/10	TCB750/10, T-code belt, 10 scan head modular scanning system
LCT750/10	LCT750/10, T-code tray, 10 scan head modular scanning system
LCT750/12	LCT750/12, T-code tray, 12 scan head modular scanning system
LCB750/12	LCB750/12, T-code belt, 12 scan head modular scanning system
LCB750/14	LCB750/14, T-code belt, 14 scan head modular scanning system
TBD	Redundancy option; additional price (includes 2nd tach, light switch and OTS)
UCB2	Underneath scanner for belt conveyor standard (includes: 2 CLV, blower, cables, connect box and bracket)
UCB2 OTS	Underneath scanner for belt conveyor with OTS (includes: 2 CLV, blower, cables, brackets and OTS 400)

Omni System Components

(Included in OPS System, quantities per system configuration dependent)

Part #	Description
1 016 958	CLV490-0010 line (standard density)
6 021 164	CAN cable, 2.3 ft (0.7 m)
6 021 165	CAN cable, 9.8 ft (3.0 m)
6 021 168	CAN cable, 16.4 ft (5.0 m)
2 019 848	Cable with EEPROM plug (for USB)
6 021 166	CAN cable OTS/scanner 16.4 ft (5.0 m)
6 021 167	Resistor
2 021 164	Scanner connector with EEPROM in connector housing
2 023 599	Scanner connector with EEPROM in connector housing (with blower connect)
2 021 858	Mounting kit, pre-assembled (includes mounting plate, angles, quick release, screws, washers, nuts)
4 033 237	Mounting plate 21.3 x 6.3 x 0.6 in (540 x 160 x 16 mm)
4 033 228	Mounting angles
2 016 110	Quick release brackets
4 025 868	Double bracket (for UCB)
1 017 867	OTS OMNI-Tracking controller including OTC and power supply in IP 65 housing
2 021 153	Light switch WL18-2P430 including reflector and cable

Omni System Options and Recommended Spare Parts

(OPTIONAL)

Part #	Description
1 016 958	CLV490-0010 line (standard density)
1 016 960	CLV490-0011 line with heater (standard density)
1 017 866	OTC OMNI-Tracking controller IP 20 (spare)
6 020 875	Power supply, 24 V/10 A (spare)
2 022 714	Incremental encoder IG 64
5 001 070	Blower fan with cable (recommended for ALIS bottom scanning option)
4 028 998	Blower fan filter (recommended for ALIS bottom scanning option)
1 022 154	RDT workstation sold with license RDT400-1000
1 022 153	1-10 clients RDT400-0000
1 023 647	11-24 clients RDT400-2000
1 023 648	25-64 clients RDT400-3000
1 022 155	RDT demo version RDT400-0010

**PC quoted upon request, otherwise customer supplies PC*

MACHINE VISION SYSTEMS

ICR 850

Vision Scanners

Part #	Model	Description
1 019 580	ICR 850-0010	Straight reading window, RS 232/422/485
1 019 602	ICR 850-1010	Lateral reading window, RS 232/422/485
1 022 583	ICR 850-0020	Straight reading window, RS 232/422/485, Ethernet
1 022 585	ICR 850-1020	Lateral reading window, RS 232/422/485, Ethernet

Power Supplies

Part #	Model	Description
7 024 494	PS 53-1000	115/230 V AC line voltage with 6 ft US line cord
7 024 495	PS 53-0000	24 V DC required

Brackets

Part #	Model	Description
2 025 491	(TBD)	Mounting bracket including screws (2 x self-locking screws M 5x16)

PART NUMBERS & ACCESSORIES

ICR 850

Cables

Part #	Model	Description
6 010 075	KP-DB15H-2E	15-pin F to 15-pin M, straight through 6.5 ft (2.0 m) long cable
7 021 851	KP-DB09-2E	9-pin F to 15-pin M, straight through 6.5 ft (2.0 m) long cable (programming cable)
7 021 849	KP-DB09-3E	9-pin F to 9-pin M, straight through 9.8 ft (3.0 m) long cable
6 026 083	(TBD)	Ethernet data cable, shielded with 2 RJ 45 connectors; ICR to Ethernet network
6 026 084	(TBD)	Ethernet crossover cable, shielded with 2 RJ 45 connectors; ICR to PC

Setup Software

Part #	Model	Description
7 026 126	CLV Setup Software-CD	Windows™-based CLV programming software

HAND HELD SCANNERS

IT 3800

Linear Imager

Part #	Model	Description
6 020 935	IT3800LR-12 Imager	Hand held linear imager scanner (includes wall holder)
6 021 576	IT3800HD-12 Imager	Hand held linear imager scanner, high density (includes wall holder)

Accessories

Part #	Model	Description
7 025 981	PS5U-41 Power Supply	120 V AC input power supply for IT 3800/ST 2000
7 025 580	KP-HH-RS232-DB9F/2.4M-3800	Direct connect to standard RS 232 TTL - DB 9-pin F/2.4 m (external power required)
7 025 700	KP-HH-RS232-DB9F/4.5M-3800	Direct connect to standard RS 232 TTL - DB 9-pin F/4.5 m (external power required)
7 026 496	KP-HH-PC-PS2/2.4M-3800	Direct connect to PS 2 (mini DIN) - keyboard wedge - 2.4 m (no external power required)
7 025 579	3800/D0/UG	IT 3800 Users Guide
7 025 701	Visual Menu Software	Windows™-based programming software
7 025 702	IT 3800 Holder	IT 3800 wall or counter holder, beige

ST 5750

Laser Scanner

Part #	Model	Description
6 022 219	ST 5750A-12	Industrialized laser scanner, standard range ST 5750
6 022 221	ST 5750ALR-12	Industrialized laser scanner, advanced long range ST 5750

Accessories

Part #	Model	Description
7 026 203	PS5U-11	Universal 100…250 V input power supply for ST 5750/IT 4410/IT 4710
7 026 493	KP-HH-RS232-DB9F/2.4M-5750	Direct connect to standard RS 232 TTL - DB 9-pin F/2.4 m (external power required)
7 026 495	KP-HH-PC-PS2/2.4M-5750	Direct connect to PS 2 (mini DIN) - keyboard wedge - 2.4 m (no external power required)
7 025 703	5750/D0/UG	ST 5750 Users Guide
7 025 704	Scan Holder/ST 5750	ST 5750 wall mount

IT 4410/4710

2D Imager

Part #	Model	Description
7 026 210	IT 4410LR-131CK 2D Kit	IT 4410 long range 2D linear imager kit with power supply and true RS 232 cable, 2.4 m
7 026 209	IT 4410HD10-131CK 2D Kit	IT 4410 high density 2D linear imager kit with power supply and true RS 232 cable, 2.4 m
7 027 009	IT 4410LD-121CK 2D Kit	IT 4410 long range 2D linear imager kit with power supply and PS 2 keyboard wedge, 2.4 m
7 026 551	IT 4410HD-121CK 2D Kit	IT 4410 high density 2D linear imager kit with power supply and PS 2 keyboard wedge, 2.4 m

Fixed Position 2D Imager

Part #	Model	Description
7 026 212	IT 4710LR-131CK 2D Kit	IT 4710 long range fixed position 2D linear imager kit with power supply and true RS 232 cable, 2.4 m
7 026 211	IT 4710HD10-131CK 2D Kit	IT 4710 high density fixed position 2D linear imager kit with power supply and true RS 232 cable, 2.4 m

Accessories

Part #	Model	Description
7 026 203	PS5U-11	Universal 100…250 V power supply
6 020 845	KP-HH-RS232-DB9F-2.4M-2D	Direct connect to standard RS 232 - DB 9-pin F / 2.4 m (external power required)
7 025 706	KP-HH-RS232-DB9F-4.5M-2D	Direct connect to standard RS 232 - DB 9-pin F / 4.5 m (external power required)
6 020 846	44/47SCANSTAND	Hands-free stand for IT 4410/IT 4710
7 025 707	44/4710/UG	IT 4410/IT 4710 Users Guide
7 025 701	Visual Menu Software	Windows™-based programming software

PART NUMBERS & ACCESSORIES

IT 3870/ST 5770

Cordless Series

Part #	Model	Description
7 026 205	IT 3870LX-A2 Imager	Cordless hand held linear imager with NiMH battery
7 025 714	ST 5770STD-A2 Laser	Cordless standard range hand held laser scanner with NiMH battery
7 025 715	ST 5770ALR-A2 Laser	Cordless long range hand held laser scanner with NiMH battery

Accessories

Part #	Model	Description
7 025 720	ST 2070-1A Base	Cordless base station (up to 9 cordless hand held scanners per base), 50 ft radius range
7 025 716	PS 120/9V	120 V AC input power supply for ST 2070 base
7 025 717	UC2 Charging Station	2 gang universal charging station - includes power cord
7 025 718	UC6 Charging Station	6 gang universal charging station - includes power cord
6 021 289	NiMH Battery	NiMH Battery
6 020 925	KP-HH-RS232-DB9F/2.4M-RF	Connect ST 2070 base (Aux port) to Standard RS 232 - DB 9-pin F, 2.4 m
6 020 917	KP-HH-PC-AT/XT/2.4M-RF	Connect ST 2070 base (Host port) to Keyboard Wedge (AT/XT), DIN, 2.4 m
7 026 927	KP-HH-PC-PS2/2.4M-RF	Connect ST 2070 base (Host port) to Keyboard Wedge (PS 2), Mini DIN, 2.4 m
7 025 721	CLESS/BH Belt Holster	Belt holster for cordless unit
6 020 929	CLESS/WMK/IND Wall Mount	Wall mount bracket for cordless units
7 025 701	Visual Menu Software	Windows™-based programming software
7 025 722	38/5770/SM	Systems manual for 3870/5770 cordless scanners

ST 2000

Keyboard Wedge

Part #	Model	Description
6 010 829	ST 2000/C-5 KB Wedge	Keyboard wedge with RS 232 Aux - power via external power supply

Accessories

Part #	Model	Description
7 025 981	PS5U-41 Power Supply	120 V AC input power supply for IT 3800/ST 2000
7 025 708	KP-HH-PC-PS2/AT/XT-ST2000	Connect ST 2000 to IBM PC - PS 2/AT/XT combo for keyboard wedge
7 025 709	KP-HH-RS232-DB9M-ST2000	Aux port of ST 2000C to DB 9M with RxD on pin 2
7 025 710	Wand/ST 2000	Programming wand - used to program ST 2000 wedge
7 025 711	ST 2000/PM	ST 2000 programming manual
7 025 712	ST 2000/TM	ST 2000 technical manual

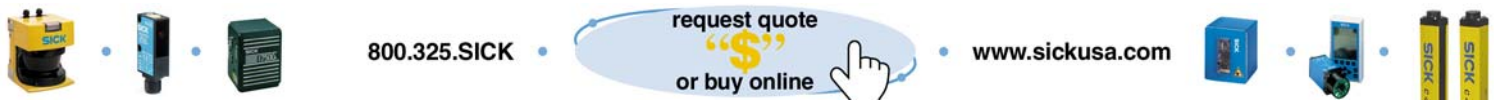

LASER MEASUREMENT SYSTEMS

Indoor

Indoor Systems

Part #	Model	Description
1 015 850	LMS 200-30106	Indoor, 180° scan window, 0…10 m range, blue housing
1 018 028	LMS 291-S05	Indoor, 180° scan window, 1…30 m range, fog correction, grey housing

Connection/Mounting Brackets

Part #	Model	Description
2 018 963	Connection Set 1 LMS	Interface and power connectors without cables
2 018 964	Connection Set 2 LMS	Interface and power connectors with 5 m long cables
2 018 965	Connection Set 3 LMS	Interface and power connectors with 10 m long cables
2 015 623	Mounting Set 1 LMS	LMS Mounting Set 1, stationary bracket
2 015 624	Mounting Set 2 LMS	LMS Mounting Set 2, mounts to Set 1 (Set 1 necessary for Set 2)
2 015 625	Mounting Set 3 LMS	LMS Mounting Set 3, mounts to Set 2 (Set 1 and Set 2 necessary for Set 3)
2 020 925	Fine Adjustment mounting set	Fine adjustment mounting set; 2 axis
2 020 926	3rd Axis for fine adjustment	3rd axis for fine adjustment; Fine Adjustment Mounting Set (2 020 925) necessary

Cables

Part #	Model	Description
2 016 401	Interface Cable 3m LMS	Interface cable; 3 m long (programming cable)
2 016 402	Interface Cable 5m LMS	Interface cable; 5 m long (programming cable)
2 016 403	Interface Cable 10m LMS	Interface cable; 10 m long (programming cable)

System Application/Expansion Interfaces *- to expand the capabilities of all laser measurement scanners*

Part #	Model	Description
1 016 761	LMI 200	Evaluation and control unit for measurement application
1 013 867	LMI 400-60002	Interface; 1 to 4 sensors, 6 switching outputs (adds outputs and field sets to all LMS)

Interface Card *- for collecting data in real time*

Part #	Model	Description
6 011 807	ISA PC Interface Card LMS	Serial, high speed ISA PC interface card RS 422 (500 kBd)
6 022 515	PCI PC Interface Card LMS	Serial, high speed PCI PC interface card RS 422 (500 kBd)
7 026 897	PCMCIA Card LMS	Serial, high speed PC interface card RS 422 (500 kBd)

PART NUMBERS & ACCESSORIES

Indoor

Standard User Software - *used for setting fields in LMS*

Part #	Model	Description
7 025 784	Software LMS	LMS/LMI User Software (diskette and instructions)

Telegram Listing - *data format and command language listings for all LMS*

Part #	Model	Description
8 007 954	Telegram Listing	LMS/LMI 400 Telegram Listing

Adapters/Power Supply

Part #	Model	Description
6 010 361	Main Adapter 24 V DC/2.5 A	2.5 A power supply
6 010 362	Main Adapter 24 V DC/4 A	4.0 A power supply (capable of powering two indoor LMS)
6 011 156	Main Adapter 24 V DC/10 A	10.0 A power supply (capable of powering one outdoor or four indoor LMS)

Beamfinder

Part #	Model	Description
6 020 756	Scanfinder LS70B	Receiver for locating scans

Outdoor

Outdoor Systems

Part #	Model	Description
1 015 945	LMS 220-30106	Outdoor, 180° scan window, 0…10 m range, heater, blue housing
1 018 023	LMS 211-30206	Outdoor, 100° scan window, 1…30 m range, fog correction, heater/lens, grey housing
1 018 022	LMS 221-30206	Outdoor, 180° scan window, 1…30 m range, fog correction, heater, grey housing

Shields/Mounting Brackets

Part #	Model	Description
2 025 793	Dust Prevention Shield	Dust prevention shield for LMS 211 only, grey housing
2 018 306	Dust Shield w/Motor Shutter	Dust prevention shield with integrated motor shutter for LMS 211 only, grey housing
4 034 559	Dust Prevention Shield	180° dust prevention shield for LMS 220/221
2 018 303	Mounting Set LMS	Mounting set (alignment bracket)
2 018 304	Mast Bracket LMS	Mast bracket (mounting set necessary)
5 306 222	Tightening strap	For mast bracket (above), per meter
5 306 221	Tightening strap lock	For mast bracket (above)

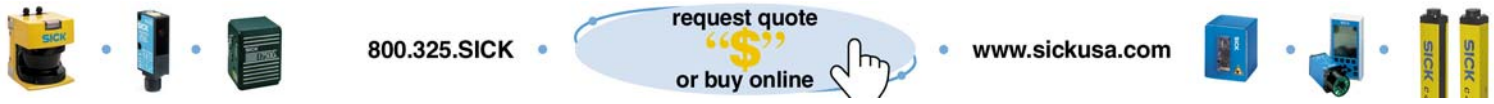

Outdoor

Cables

Part #	Model	Description
2 019 561	Interface Cable Outdoor LMS	Interface cable, 5 m long, connector with 2 cables for configuration and power
2 018 301	Outdoor Plug with Housing	Replacement outdoor LMS connection plug with housing LMS 211/LMS 220/LMS 221
6 004 379	Outdoor Plug w/o Housing	Replacement outdoor LMS connection plug without housing

System Application/Expansion Interfaces - *to expand the capabilities of all laser measurement scanners*

Part #	Model	Description
1 016 761	LMI 200	Evaluation and control unit for measurement application
1 013 867	LMI 400-60002	Interface; 1 to 4 sensors, 6 switching outputs (adds outputs and field sets to all LMS)

Interface Card - *for collecting data in real time*

Part #	Model	Description
6 011 807	ISA PC Interface Card LMS	Serial, high speed ISA PC interface card RS 422 (500 kBd)
6 022 515	PCI PC Interface Card LMS	Serial, high speed PCI PC interface card RS 422 (500 kBd)
7 026 897	PCMCIA Card LMS	Serial, high speed PCMCIA interface card RS 422 (500 kBd)

Standard User Software - *used for setting fields in LMS*

Part #	Model	Description
7 025 784	Software LMS	LMS/LMI User Software (diskette and instructions)

Telegram Listing - *data format and command language listings for all LMS*

Part #	Model	Description
8 007 954	Telegram Listing	LMS/LMI 400 Telegram Listing

Adapters/Power Supply

Part #	Model	Description
6 010 361	Main Adapter 24 V DC/2.5 A	2.5 A power supply
6 010 362	Main Adapter 24 V DC/4 A	4.0 A power supply (capable of powering two indoor LMS)
6 011 156	Main Adapter 24 V DC/10 A	10.0 A power supply (capable of powering one outdoor or four indoor LMS)

Beamfinder

Part #	Model	Description
6 020 756	Scanfinder LS70B	Receiver for locating scans