Chapter 3
Connecting the LL 500

Connecting To a Host Device

In most cases, to connect the LL 500 to the host terminal, just plug one end of the cable into the Host or Aux port and the other into your host. Typical configurations are shown on the following pages.

Some POS keyboards, however, require more intricate installation instructions. See *Connecting Keyboard Wedges* beginning on page 3-5.

We recommend you turn off power to the LL 500 prior to connecting or disconnecting cables.

See *Cables* beginning on page 3-24 to identify the appropriate cable for your host.

After you've connected your LL 500 to your host terminal, refer to *Chapter 5, Programming* for programming instructions.

OCIA and OCR Terminals

The OCIA or OCR port must be activated and referenced by the POS system, or no communications can occur.

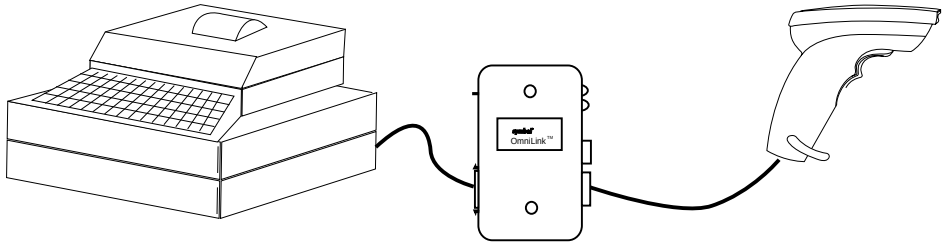

Figure 3-1. Connecting to an OCIA or OCR Terminal

Supported hosts include:

OCR

IBM 3653 / 3683 / 3684 / 5265, Fujitsu 7770 / 7880 / 7990 / 8770 / 9000, SASI, Tandem, Omron RS80 / 80B / 80E / RS81, Sweda, Casio, ICL 9512, ICL 9516.

OCIA

NCR 255 / 1255 / 2151 / 2152 / 2154 / 2155 / 2157 / 2126 / 2126-1120 / 2126-1320 / 2950 / 7050 / 7051 / 7052, Nixdorf 8812, DTS 521, TEC 2341 / SWI, ICL 9505 / 9507 / 9518, Mitsubishi

The OCIA port on some terminals, specifically the NCR 2950, 2152 and 2257, may not be accessible from the exterior of the unit. These terminals must be opened and the LL 500 cable connected to the OCIA port on the main processor board.

> **Note:** Some of these terminals may also be connected as POS keyboards. See *Connecting Keyboard Wedges* beginning on page 3-5.

See *Cables* beginning on page 3-24.

RS-232C (Single or Dual Port)

The LL 500 is connected to your dedicated host RS-232C device through the Host port. For dual RS-232C operation, both Host and Aux ports are utilized.

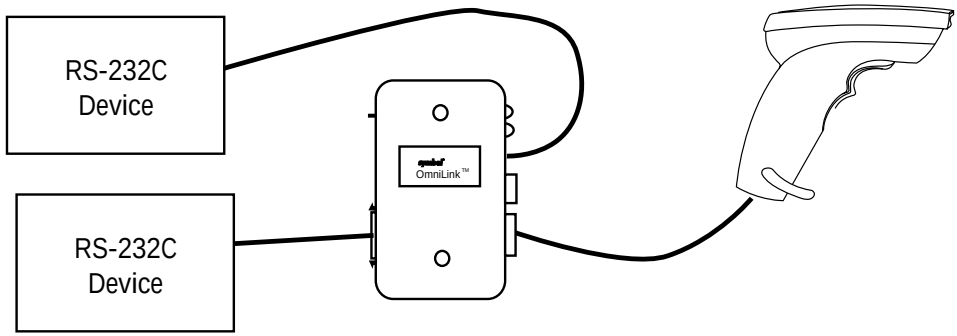

Figure 3-2. Connecting to an RS-232C Device

Any of the following RS-232C (DB 25) connectors are supported on either the Host or Aux port (8 cable options):

- Male, TxD on pin 2
- Male, TxD on pin 3
- Female, TxD on pin 2
- Female, TxD on pin 3

Refer to *Cables* beginning on page 3-24 for appropriate cables, and *RS-232C Communications Protocols* beginning on page 5-8.

PC and Terminal Keyboards

To connect the LL 500 as a keyboard wedge, plug the 40-pin connector into the Host port, disconnect the keyboard from the terminal, plug the keyboard connector into the LL 500 cable, and the other end of the cable into the terminal.

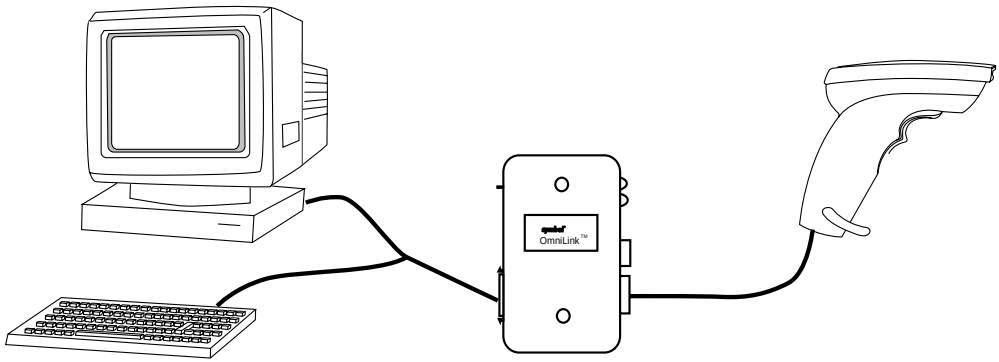

Figure 3-3. Connecting to PCs and Terminals

Supported hosts include:

PC Keyboards

HP Vectra ES / CS / RS / QS, IBM PC / AT / XT, PS2-30 / 50 / 55SX / 60 / 70, NCR PC 4 / 8, Compaq Deskpro, 286 / 386, Zenith 248, Adds PC I / II, Columbia PC, ITT PC, Leading Edge PC, Sperry PC, Tandy HD 1200, Wyse PC / PC Enhanced

Terminal Keyboards

Burroughs B27 / B25, DEC VT2XX / VT3XX, Decision Data 3496 / 3761, HP 700 / 92, 2392, I / O 88 / 122, IBM 3178 / 3278 / 3151 / 316X / 3179 / 3180 / 319X, 347X, ITT 12000 / 9212 / 9232, Tandem 6526, 6530, Telex-Memorex 88 / 122, TI 924, Wyse 50 / 60

Refer to *Cables* beginning on page 3-24 for appropriate cables.

Connecting Keyboard Wedges

IBM 3683/3684 Installation

There are four basic steps to this installation:

1. Remove the IBM 3683/84 top cover.
2. Remove the keyboard.
3. Install the cable internally or externally.
4. Replace the keyboard and top cover.

Caution

Install cables as follows. Failure to do so may result in hardware damage.

Remove the IBM 3683/84 Top Cover

1. Set the ON / OFF switch to OFF.
2. If the display is integrated, disconnect the display cable.
3. Release the front cover latches (*Figure 3-4*).
   a. Insert a spring hook through the gap between the top cover and base at the side of the cash register near the ON / OFF switch.
   b. Hook the spring latch and pull it outward to release.
   c. Lift the cover slightly at this corner and maintain it in lifted position to prevent it from relatching.
   d. Repeat this procedure and release the spring latch at the opposite side of the machine.

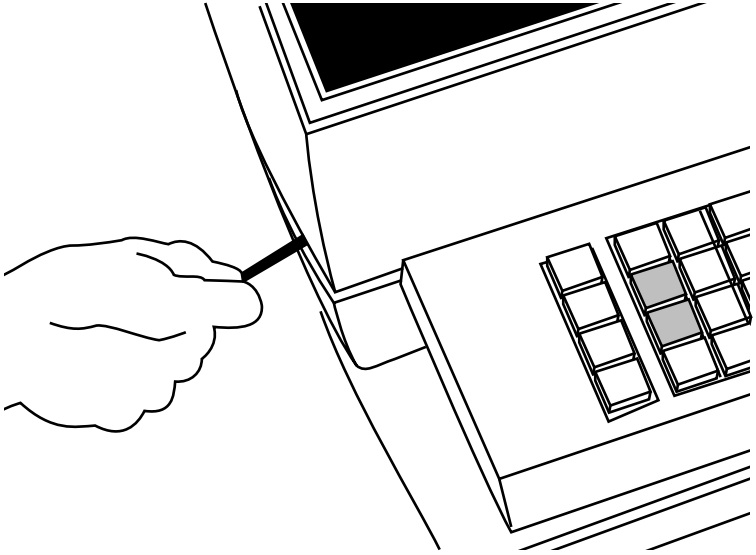

Figure 3-4. Removing the IBM 3683/84 Top Cover

4. Holding the cover near the front on both sides, lift the front, then push toward the rear of the machine to release it from the retaining tabs.

5. Disconnect the cable from the connector on the right side (*Figure 3-5*).
6. Lift the entire cover straight up to remove it.

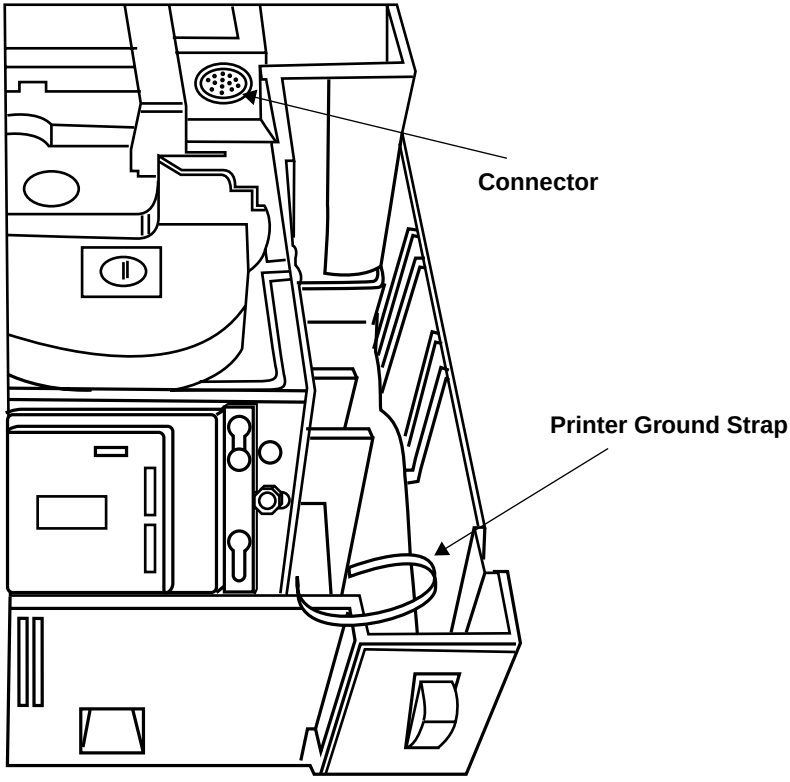

Figure 3-5. IBM 3683/84 Top Cover Removed

Remove the Keyboard

Remove the keyboard by lifting it straight up through the retaining guides.

Install the Cable Internally

The LL 500 cable is installed internal to the IBM 3683 / 84 with the cable exiting the rear of the terminal.

1. Remove the printer assembly as follows:
   a. Disconnect the printer ground strap (slide on connector) from the right side of the printer, as shown in *Figure 3-5*.
   b. Slide the two printer locking tabs (black plastic) toward the front of the register while pressing downward, as shown in *Figure 3-6*.
   c. Lift the printer up and out.

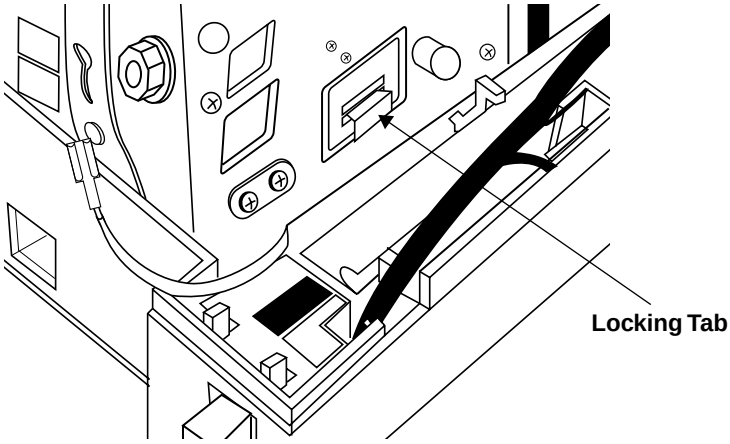

Figure 3-6. IBM 3683/84 Locking Tabs

2. The cable to be installed is illustrated in *Figure 3-7*.

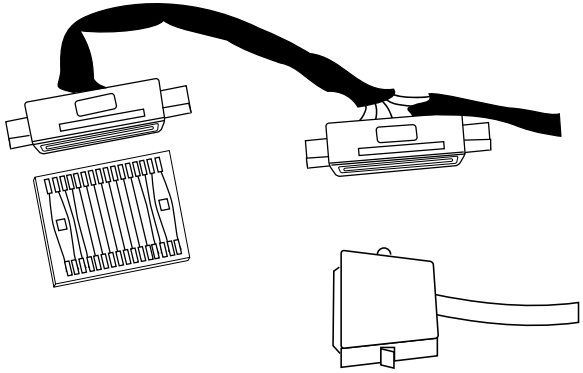

Figure 3-7. IBM 3683/84 Cable

3. Mark an X on the side of J16 that faces the front of the terminal. Remove the J16 connector from the keyboard connector bracket. Slide the J16 connector under the printer mounting plate (*Figure 3-8*).

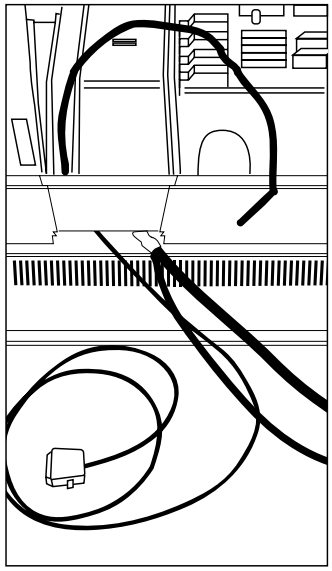

Figure 3-8. IBM 3683/84 J6 Connector

4. Using a small screwdriver, remove the cable access door from the rear of the register. Position the cable to connect J2 to J16 using the jumper PCB. Make sure J2 and J16 are positioned so that the X and • align. (Some cables are marked with TERM rather than •.) Use the tie wraps provided to secure the connection. See *Figure 3-9*.

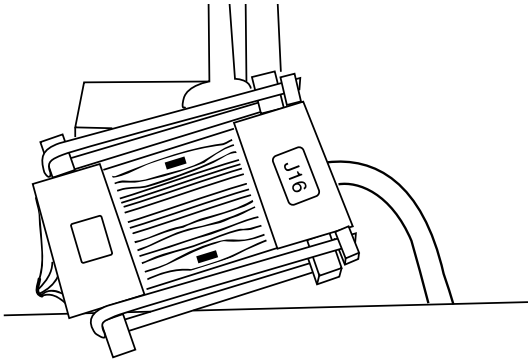

Figure 3-9. Connecting J2 and J6 Using the Jumper PCB

5. Slide J1 under the printer mounting plate to the keyboard access opening. Pull it through the opening and secure it with the retaining clips (where J16 originally was). See *Figure 3-10*. (Some cables are marked with KBD or Keyboard rather than •.)

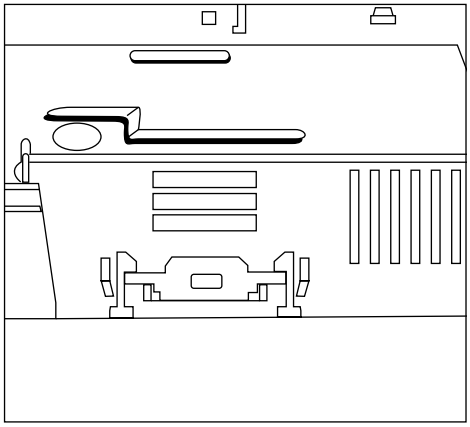

Figure 3-10. Securing J1

6. Push the J2/J16 connection under the printer mounting plate. Replace the cable access door at the rear of the register.
7. Replace the printer assembly as follows:
   a. Attach the ground strap to the right side of the assembly.
   b. Fasten the locking tabs by sliding them toward the rear of the register.

Replace the Keyboard and Top Cover

1. Replace the keyboard down into the retaining glides.
2. Replace the top cover as follows:
   a. Replace the display cable if the display is integrated.
   b. Hold the cover so that the rear slots fit into the retaining tabs.
   c. Lower the cover at the front to engage the front side latches.

You can now attach your scanner and peripheral devices.

IBM 3653 Installation

1. Be sure the IBM 3653 terminal is powered-down. Open the door over the ribbon cartridge as shown in *Figure 3-11*.

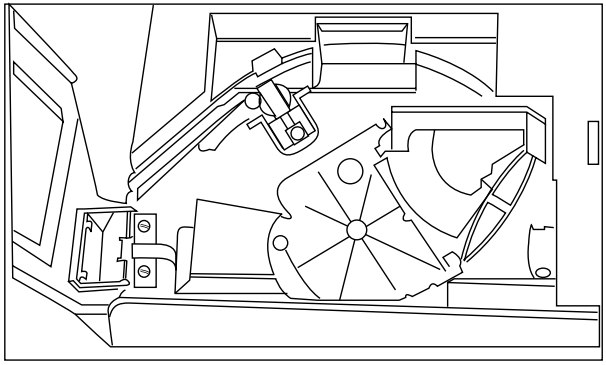

Figure 3-11. IBM 3653 Door Open

2. Loosen the right side panel screw (*Figure 3-11*). Grasp the right panel at the top of the rear corner; pull out to the side and push back to remove the panel.
3. Loosen the two screws behind the top of the keyboard cover. Lift and remove the keyboard cover. See *Figure 3-12*.

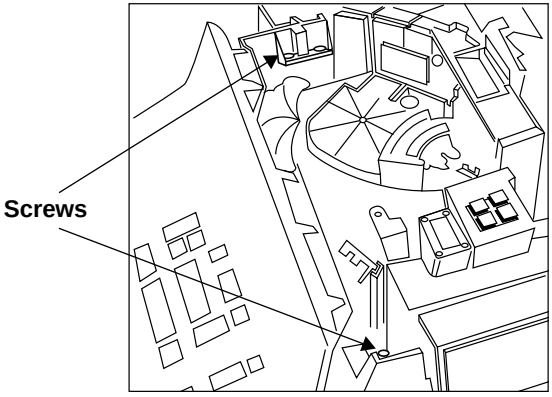

Figure 3-12. Screws Behind Keyboard Cover

4. From the bottom of the register, slide the cable retaining clips until the cables are free. From inside the register, pass the LL 500 cable (single end) through the power cable hole. See *Figure 3-13*.

Caution

Use extreme care to avoid damaging the connector pins.

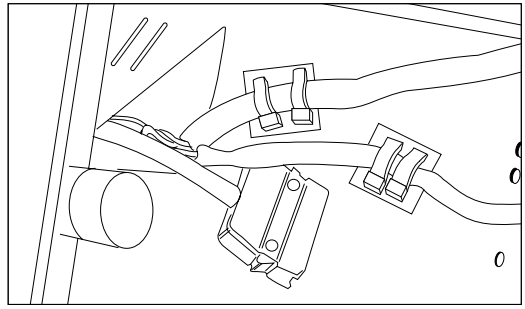

Figure 3-13. IBM 3653 Cable

5. Loosen the screw on the base of the cash register near the bottom left side of the card cage. Swing the card cage open by pulling on the left side. See *Figure 3-14*.

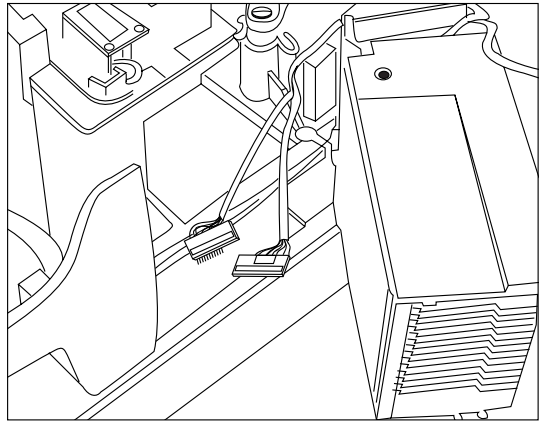

Figure 3-14. Card Cage

6. Locate the keyboard connector to check for 5 volts DC. Using a DVM, connect the GND (-) probe to the screw that holds the keyboard to the chassis, and connect the POS (+) probe to the 5-volt lead on the TOP ROW of the keyboard connector, second from right (*Figure 3-15*). Turn on the cash register. If the voltage is less than 5 volts, locate the voltage adjustment hole on the power supply case behind the card cage (*Figure 3-16*). Using a flexible screw driver, adjust the potentiometer until the voltage is 5.0 to 5.1 volts. Turn off the register and remove the DVM.

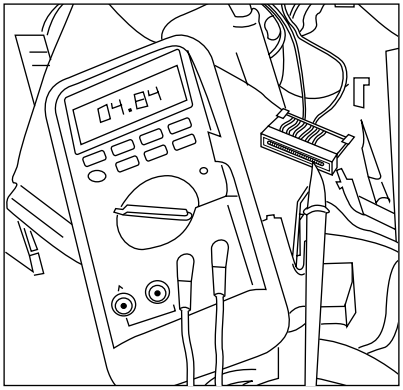

Figure 3-15. Checking for 5 Volts

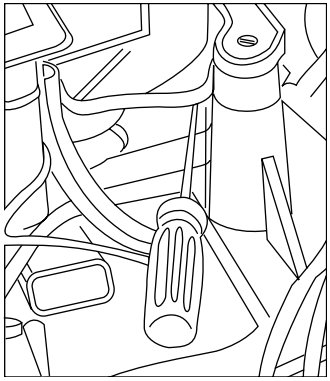

Figure 3-16. Adjusting Voltage

7. Route the cable under the card cage to the front of the register.
8. Locate the keyboard connector on the keyboard and observe its orientation while removing the connector.
9. Place the shrink sleeve over the cable assembly (heat with blow dryer or heat gun to shrink the sleeving if possible).
10. Insert the polarizing key into the top right corner socket. The polarizing key is found in the bag containing the tie wrap.
11. Remove the protective foam from the register end of the LL 500 Y-cable, and insert into the cable assembly. Place the assembly near the bottom of the register behind the keyboard.
12. Install the keyboard connector, as shown in *Figure 3-17*. Secure with the tie wrap that doesn't have a mounting hole.

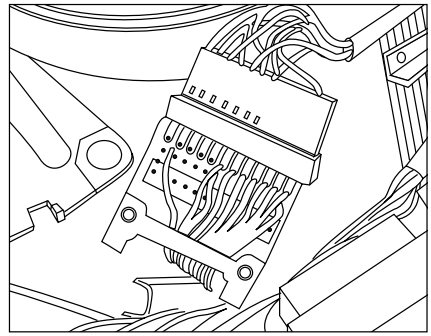

Figure 3-17. Installing Keyboard Connector

13. Locate the brass plate behind the card cage and remove the front left screw. Install the tie wrap between the screw and plate. Replace the screw and tighten.
14. Loop the tie wrap around the cable. Insert in the slot and pull tight.
15. Close the card cage and tighten the screws.
16. Replace the keyboard cover and side panel, then tighten the screws.

You can now attach your scanner and peripheral devices.

NCR 280 Installation

1. Ensure that the NCR 280 is powered down and unplugged. Open the door on the top, left-hand side and remove the two screws which fasten the steel plate to the terminal cover. Slide the steel plate to the left to remove.
2. Remove the two round head screws from the back of the terminal. Be sure the doors on the left and right side of the terminal are open and that there are no keys inserted in the locks on the front. Lift off the terminal cover.
3. Locate the card edge connector to the left of the keyboard. Mark the top side of the connector before removing it from the keyboard.
4. Remove the four “C” clips that hold the keyboard in place. Remove the keyboard.
5. Feed the end of the LL 500 cable with the 2x8 header connector under the large capacitor mounted horizontally in the terminal power supply. Feed the cable between the two large vertically-mounted capacitors, then through the hole in the plate adjacent to these two capacitors. Feed through enough cable so that the cable reaches the terminal keyboard.
6. Mate the 2x8 header connector to the connector on the interface board. Note that pin 10 is keyed.
7. With the component side up on the interface board, connect the card edge connector on the interface board to the card edge on the keyboard. The interface board will be mounted under the keyboard PC board.
8. Connect the card edge connector, removed earlier from the keyboard, to the interface board, with the marked side facing down.
9. Replace the keyboard with the interface board attached. Be sure the interface board is installed so that it doesn't interfere with any cable assemblies. Replace the “C” clips.
10. Remove any slack in the LL 500 cable by gently pulling it back through the terminal power supply.
11. Using the cable tie provided, secure the LL 500 cable to the cable bundle near the capacitor, which is mounted horizontally approximately 6 1/2 in. from the rear of the terminal.

12. Cut a 1-in. diameter semicircle at the bottom left of the terminal cover, approximately 6 1/2 in. from the back of the unit, so that when the cover is replaced, this opening fits over the cable. Be sure to file down all sharp edges.
13. Replace the terminal cover making sure the cable fits into the opening; secure the two screws at the back of the terminal. Replace the steel plate to the terminal cover and secure.

You can now attach your scanner and peripheral devices.

NCR 2151 Installation

1. Be sure the NCR 2151 terminal is powered-down. Remove the terminal's front grille by loosening the two screws (turn clockwise) that fasten the grille down to the front of the terminal. Fully extend the card slide assembly. Disengage the catches holding the board assemblies in place. Then gently pull out the processor board (top board) until the connectors at the rear of the board become visible. To prevent the board from falling through the card slide assembly, it may be necessary to support the board assembly during this phase.
2. Locate the integrated circuit designated U109 on the processor board. Note U109's orientation by locating its pin 1; this is crucial for the replacement that follows.

   Note that U109 is socketed. Using a small screwdriver, remove U109 from its mating socket. Replace the part with the Terminal Retrofit Circuit provided with the installation kit. Be sure that the replacement part is oriented in the same direction as the part it replaces.
3. Locate the J3 connector on the processor board. If you face the front, this connector is located at the back right-hand side of the processor board. If a cable mates to J3, carefully note its orientation, for it must be returned to the same position later. Carefully remove this cable.
4. Locate the T-Board provided (p / n 21-03428-01, labeled LL385-I02”T”). Connect J1 of this T-Board to J3 on the terminal's processor board. Note that the Cable T-connector can mate with J3 in one direction only. Since the connectors are not keyed, make sure that the connecting pair is properly aligned.
5. Locate the end of the LL 500 cable that branches into a “Y”. Slide that end under the board assembly inside the register. Leave enough slack to make the connection required in the next few steps.
6. Mate the LL 500 cable “Y” branch ending in a 2 x 6 female box-type connector to P1 on the T-Board. Connector P1 is the middle connector on the T-Board. Note that connector position 1 of the mating pair is keyed.

7. If J3 on the processor board had a cable mating to it, then that cable must mate with the T-Board at connector P2. Note the cable's orientation; it is extremely important. The cable must have the same orientation it had when it was removed. If there was no cable mating with J3 in the register, then P2 on the T-Board will have nothing connected to it.
8. Locate the provided NCR 2151 Cable Board (p/n 24-04793-01) in the shipping container. Mate the LL 500 cable "Y" branch ending in a 2X7 female box-type connector to the 2X7 male right-angle connector on the edge of the NCR 2151 Cable Board. Note that the connectors are keyed and will mate in one direction only.
9. Carefully remove the connector marked I/O P7 from its mate (J7) on the terminal's processor board. Facing the front of the terminal, this connector is located at the far left-hand side of the processor board. Take the NCR 2151 Cable Board and face the 2X7 connector attached earlier toward the back of the terminal. Mate the ribbon connector marked I/O P7 with the long male connector on the cable board. Be sure that the ribbon connector label I/O P7 faces toward the back of the terminal. Also be sure the left and right edges of the two connectors line up. These connectors are not keyed, so this check is very important.
10. Note the female right-angle connector on the cable board. Its opening should be facing you. Turn over the cable board and slide the board forward to mate the female connector with J7. Be sure the left and right edges of the connectors line up. These connectors are not keyed, so this check is very important.
11. Carefully slide the board assembly to its original position in the card slide. Then return the card slide to its retracted position. Check that all cables mating to the board assemblies are still firmly seated in position.
12. Locate the supplied cable fastener hardware. Using the hardware, secure the LL 500 cable to one of the cable fastening posts located at the bottom front edge of the terminal housing. Replace the grille removed at the beginning of this procedure. The LL 500 cable should be positioned so that it fits through a slot located at the bottom of the grille.

You can now attach your scanner and peripheral devices.

NCR 2152 Installation

1. Switch off the NCR 2152. Remove the two large, pan head screws from the front of the terminal to allow the top section to open up. Use the two hood support rods located to the sides of the housing to support the top section.
2. Locate the large steel plate covering the printed circuit board assembly. Remove the two screws on the right-hand side of the plate. Loosen, but do not remove, the two screws holding down the left side of the plate. Slide the plate to the left, lift up and remove to expose the component side of the processor board.
3. Locate the Keyboard Interface connector at the back left of the processor board. This connector is designated either J12 or J8, depending on the processor board used. Mark the top of the connector with tape or a felt marker.
4. Feed the LL 500 cable up through the opening at the back of the terminal. The opening is on the same side as the Keyboard Interface connector.
5. Connect J1 of the LL 500 cable to the mating connector, P1, on the cable T-Connector provided (P1 is the middle connector). **Note that position 16 for the connector pair is keyed**.
6. Unplug the Keyboard Interface connector. Connect the Keyboard Interface ribbon cable (marked side up) to P2 of the T-Connector. P2 is the top connector on the T-Connector; position 2 of the connector pair is keyed.
7. Connect J1 of the T-Connector to J12/J8 on the terminal processor board. The T-Connector can mate with J12/J8 in one direction only.
8. Locate and remove the pan head cable mounting screw on a flat steel panel in the terminal housing. It is about 4 in. to one side of the T-Connector. Use the tie provided to secure the cable to the terminal housing; replace the pan head screw. The cable must be secured so that the T-Connector is seated vertically (i.e., at 90°) to the processor board.
9. Replace the metal plate that covers the processor board.
10. Remove the hood supports and lower the top of the terminal into position. Replace the two pan head screws to secure the top housing.

You can now attach your scanner and peripheral devices.

NCR 2154/2155 Installation

1. Power-down the NCR 2154/2155 POS terminal.
2. Remove the keyboard by grasping the keyboard cover at its corners and lifting upward.
3. Remove the cable connecting the keyboard to the terminal's main PC board.
4. Install the LL 500 cable in place of the keyboard cable just removed. The modular connector should be connected to J1 on the keyboard, and the 6-pin square connector should be connected to J4 on the terminal's main PC board.
5. Reinstall the keyboard by first placing the tabs, located on the back left and back right of the keyboard cover, behind the tabs located in a similar position on the terminal. The keyboard cable should be made to pass through the notch located at the rear left side of the keyboard cover.
6. Finally, making sure that the remaining tabs on the keyboard cover are positioned inside the terminal housing, press down on the keyboard cover until it snaps into place.

You can now attach your scanner and peripheral devices.

NCR 7052 Installation

1. Switch off the NCR 7052 and remove the rear panel. If the terminal is not powered down before the rear panel is removed, the unit turns itself off. Note that the unit turns on again when the rear panel is re-installed.
2. Unplug the keyboard connector. Run the keyboard-style connectors on the LL 500 data output cable up the rear well of the terminal.
3. Plug the male keyboard connector into the female connector on the LL 500; plug the male connector from the LL 500 into the NCR 7052 base.
4. Plug the male 40-pin cable connector into the Host port on the LL 500.
5. Replace the rear panel of the terminal.

You can now attach your scanner and peripheral devices.

Fujitsu 9000 Installation

1. Switch off the Fujitsu 9000, and disconnect the power. Push down on the keyboard release latch below the keyboard. Pull the keyboard forward, lift and remove.
2. Press down the printer release tab. Push the printer back and remove. Press down the display release tab. Push the display back and remove.
3. Remove the four screws securing the top plate to the chassis. Carefully lift the top plate. Disconnect the 60-pin connector marked **KB-PR-DISP** from the motherboard.
4. Remove one of the metal filler brackets at the left-rear corner of the chassis, and insert the LL 500 cable ends with the two 15-pin connectors.
5. By the connector marked **KB** on the top plate, remove the two phillips head screws holding the connector plate to the top plate.
6. Remove the two screws holding the 15-pin D-type male connector to the plate. Push the connector through the top plate.
7. Slide the insulating sleeve over the 15-pin D-type female connector on the LL 500 cable.
8. Attach the 15-pin D-type female connector on the LL 500 cable to the 15-pin D-type male keyboard connector. Push the insulating sleeve down over the two connectors and secure both sides with tie wraps.
9. Push the 15-pin D-type male connector on the LL 500 cable through the **KB** opening on the top plate. Attach this connector to the connector plate, making sure the small U-shaped spacer is between the connector and the plate.
10. Attach the connector plate to the top plate with the small spacing washer closest to the top plate. Attach the top plate to the terminal, re-inserting the four screws.
11. Replace the display and printer. Replace the keyboard.

You can now attach your scanner and peripheral devices.

Cables

Select the appropriate cable for your host system. In the *Type* column, W=Wedge, O=OCIA, R=OCR. Remember, the right software must also be installed in the LL 500. Although the LL 500 supports all the terminals listed, it may not support newer variants of those same models. If you are having difficulty, contact the *Symbol Support Center* at the number on page ii.

Table 3-1. Host Cables

Host	Type**	Cable P/N
ADDS PC I/II	W	25-04704-01
ATT 6286/6386	W	25-04704-01 or 25-04705-01
Aux Port RS-232C	See page 3-28	
Columbia PC	W	25-04704-01
Compaq Deskpro	W	25-04704-01
Compaq 386	W	25-04704-01 or 25-04705-01
DEC VT2XX/VT3XX	W	KT-04715-01
Decision Data 3496, 3497	W	25-06055-01
Decision Data 3761	W	25-06054-01
Decision Data 3596	W	25-06201-01
Fujitsu 7770, 7880, 7990, 8770	R	25-05422-01
Fujitsu 9000	R	25-05869-01
Fujitsu 9000	W	25-10107-01
Host Port RS-232C	See page 3-28	
HP 700/92, 2392	W	25-06201-01
HP Vectra ES, CS, RS, QS	W	25-04704-01
W = Wedge, **O = OCIA, **R** = OCR		

Table 3-1. Host Cables (cont'd)

Host	Type**	Cable P/N
IBM AT/XT	W	25-04704-01
IBM PS/2 Model 30, 50, 55SX, 60, 70, 80	W	25-04705-01
IBM 3151	W	25-04711-01
IBM 316X/319X	W	25-04709-01
IBM 3178	W	25-06563-01
IBM 3179, 3180	W	25-04710-01
IBM 3278	W	25-06562-01
IBM 347X	W	25-04711-01
IBM 3653	W	KT-04717-01
IBM 3653	R	25-04708-01*
IBM 3683, 3684	W	KT-04700-01
IBM 3683, 3684	R	25-04708-01
IBM 4683/4684	Port 5B	25-04699-01
IBM 4683/4684	Port 17	25-05617-01
IBM 5265	R	25-04708-01*
ICL 9505, 9507, 9518	O	25-02080-01*
ICL 9516, 9512	R	25-04708-01*
ICL 5220/50	O	25-05719-01
ITT PC	W	25-04704-01
Leading Edge PC	W	25-04704-01
*Also requires appropriate LL 350 OCIA cable or LL 300 OCR cable		
****W** = Wedge, **O** = OCIA, **R** = OCR		

Table 3-1. Host Cables (cont'd)

Host	Type**	Cable P/N
NCR 255	O	25-02805-01*
NCR 280	W	KT-04713-01
NCR 1255	O	25-01673-01*
NCR 2126-1120	O	25-01655-01*
NCR 2126-1320	O	25-03662-01*
NCR 2127	W	25-05830-01
NCR 2151	W	KT-04703-01
NCR 2152	W	KT-04701-01
NCR 2152/2257/2950	O	25-05386-01
NCR 2154/2155/2157/7050	O	25-05387-01
NCR 2154/2155	W	25-04716-01
NCR 2950	W	KT-04701-01
NCR 7051	O	25-03571-01*
NCR 7052	O	25-05771-01
NCR 7052	W	25-04702-01
NCR PC4/PC8	W	25-04704-01
Nixdorf 8812	O	25-05781-01*
Omron RS80, 80B, 80E, RS81	R	25-04708-01*
SASI	R	25-04708-01*
Sperry PC	W	25-04704-01
Sweda 9801	R	25-04708-01
*Also requires appropriate LL 350 OCIA cable or LL 300 OCR cable		
****W** = Wedge, **O** = OCIA, **R** = OCR		

Table 3-1. Host Cables (cont'd)

Host	Type**	Cable P/N
Tandem 6526	W	25-06057-01
Tandem 6530	W	25-06056-01
Tandy HD 1200	W	25-04704-01
Telex Memorex 88, 122	W	25-04704-01
TI 924	W	25-05406-01
Wyse 50	W	25-06833-01
Wyse 60, 85, 150, 185	W	25-06202-01
Wyse PC	W	25-06202-01
Wyse PC Enhanced	W	25-06202-01
Zenith 248	W	25-04704-01
Cloning Cable	-	25-05239-01
W = Wedge, **O = OCIA, **R** = OCR		

RS-232 Cables

Select the proper RS-232C cable from *Table 3-2*.

Table 3-2. RS-232C Cables

Host	Type	Cable P/N
Aux Port RS-232C		
TxD on Pin 2, Male	RS-232C	25-05395-01
TxD on Pin 3, Male	RS-232C	25-05396-01
TxD on Pin 2, Female	RS-232C	25-04814-01
TxD on Pin 3, Female	RS-232C	25-05290-01
Host Port RS-232C		
TxD on Pin 2, Male	RS-232C	25-05398-01
TxD on Pin 3, Male	RS-232C	25-05397-01
TxD on Pin 2, Female	RS-232C	25-05400-01
TxD on Pin 3, Female	RS-232C	25-05399-01

RS-232 Cable Pin-outs

The pin-outs shown in *Table 3-3* help you to choose the right RS-232C cable.

Table 3-3. RS-232C Cable Pin-outs

LL 500	25-Pin Connector	Function
Cable: 25-05395/04814-01		
8	2	TXD
2	3	RXD
4	4	RTS
6	5	CTS
1	20	DTR
5	7	SGNL GRND
N / C	1	DRAIN

Table 3-3. RS-232C Cable Pin-outs (cont'd)

LL 500	25-Pin Connector	Function
Cable: 25-05396/05290-01		
8	3	TXD
2	2	RXD
4	5	RTS
6	4	CTS
1	6	DTR
5	7	SGNL GRND
N / C	1	DRAIN
Cable: 25-05398/05400-01		
24	2	TXD
19	3	RXD
15	4	RTS
11	5	CTS
29	20	DTR
23, 28	7	SGNL GRND
SHELL	N / C	DRAIN
Cable: 25-05397/05399-01		
24	3	TXD
19	2	RXD
15	5	RTS
11	4	CTS
29	6	DTR
23, 28	7	SGNL GRND
SHELL	N / C	DRAIN