IMPORTANT NOTICE - The LXE 2325 computers and accessories are obsolete. This electronic manual has been made available as a courtesy to LXE's 2325 customers. Please contact your LXE customer support representative for assistance.

2325 Installation and Operator's Guide

(Archived 05/28/2004)

An EMS Technologies Company

2325A136OPGDWW
E-EQ-2325OGWW-F-ARC

Language: English

Notices

Notice:

LXE Inc. reserves the right to make improvements or changes in the products described in this manual at any time without notice. While reasonable efforts have been made in the preparation of this document to assure its accuracy, LXE assumes no liability resulting from any errors or omissions in this document, or from the use of the information contained herein. Further, LXE Incorporated, reserves the right to revise this publication and to make changes to it from time to time without any obligation to notify any person or organization of such revision or changes.

Copyright Notice:

Trademarks:

The user is strongly encouraged to read Appendix B, "Regulatory Notices and Safety Information". Important safety cautions, warnings and regulatory information is contained in Appendix B.

Revision Notice

2325 Installation and Operator's Guide
Upgrade From Revision D to Revision E

Section	Action
Appendix B – Regulatory Notices and Safety Information	Updated Approvals table. Added 6816 Declaration of Conformity.

Table of Contents

Illustrations

Introduction

This manual provides operating information for the 2325 DOS hand held computer.

The LXE 2325 is a portable, DOS based computer capable of wireless data communications and is powered by a rechargeable Nickel-Metal Hydride (NiMH) battery pack and a lithium backup battery. The unit uses a PCMCIA radio (spread spectrum 2.4GHz) for wireless data communications.

The “2325 Reference Guide” contains 2325 technical information and advanced functions. Please refer to the reference guide when preparing to dock the 2325 or communicate with the host.

Please refer to the “2325 Docking Station Operator’s Guide” when using the 2325 with a Single Dock, Four Slot Dock or a vehicle mounted dock.

Getting Help

All LXE manuals are now available on one CD and they can also be viewed/downloaded from the LXE ServicePass website. Contact your LXE representative to obtain the LXE Manuals CD.

You can also get help from LXE by calling the telephone numbers listed on the LXE Manuals CD, in the file titled "Contacting LXE". This information is also available on the LXE website www.lxe.com.

Features

The LXE 2325 features:

- An 486 processor running at 33MHz to provide maximum computing power in a compact user-friendly package.
- Two Megabytes of Flash memory.
- Eight Megabytes of RAM.
- One Type II PCMCIA interface.
- One serial RJ45 connector for external PC connection.
- The 2325 is available as a batch unit (no RF), or as a 2.4GHz RF unit.
- Can be configured with or without a laser scanner (standard or long range scanner).
- Uses a 1250 mAH nickel metal hydride (NiMH) battery and has a factory installed lithium backup battery.
- An easy to read backlit monochrome liquid crystal (20 column by 16 row) display. Screen panning capability is included.
- Built-in 57-key full alphanumeric keypad.
- Four docks are available: two are AC powered and recharge the 2325 batteries as well as facilitate host communications. The Vehicle Mounted DC Single Dock recharges the battery while holding the 2325 securely in the dock. The fourth dock is

vehicle mounted and designed to hold the 2325 securely until needed – does not recharge batteries or facilitate communications.

- A holster is available.
- Spread spectrum radio is contained on a Type II PCMCIA card.
- The 2325 is a powerful work tool which runs standard or application-specific software and several host terminal emulation programs (LXE's ANSI Plus, TN3270 and TN5250 terminal emulators).

Note: LXE terminal emulation programs require radio equipped computers.

Document Conventions

This reference guide uses the following document conventions:

Convention	Meaning
ALL CAPS	All caps are used to represent disk directories, file names, and application names.
"Quotes"	Indicates the title of a book, chapter or a section within a chapter (for example, "Document Conventions").
< >	Indicates a key on the keypad (for example, <CTL>).
	Indicates a reference to other documentation.
Note:	Keyword that indicates immediately relevant information.
Caution	Keyword that indicates a cautionary warning to follow.
ATTENTION	Keyword that indicates vital or pivotal information to follow.

Batteries

A battery icon is displayed at the top right corner of the screen when the unit is running with a charged battery.

When the main battery has lost most of its charge, an icon of an “empty” battery appears at the top right corner of the screen. The 2325 also may be programmed to emit a beep at intervals when the battery is low. When you see the empty-battery icon or hear the warning beeps, you should turn the unit off and recharge or replace the batteries as soon as possible. The backup battery will retain all data in memory while the other batteries are out of the unit.

After you recharge or replace the batteries and turn the unit back on, it returns to wherever you were in your application when you turned it off.

Main Battery

The 2325 uses 1250mAH nickel metal-hydride (NiMH) batteries that are contained in battery packs. The 2325 also has a built-in lithium backup battery that temporarily saves data when the main battery loses its charge. The battery pack is a rugged plastic enclosure that is designed to withstand the ordinary rigors of an industrial environment. Exercise care when transporting the battery pack making sure it does not come in contact with excessive heat or any power source other than the LXE 2325 docking stations.

Backup Battery

The 2325 has a permanent lithium battery installed to maintain time, date and CMOS setup information. The lithium battery is not user serviceable and should last five years with normal use before it requires replacement.

Note: This battery should only be changed by authorized service personnel.

Caution: *This product contains a lithium battery. There is a danger of explosion if battery is incorrectly replaced. Replace only with the same or equivalent type recommended by the manufacturer. Dispose of used batteries according to the battery manufacturer's instructions.*

How To Insert/Replace Battery

Note: The unit will not turn on unless the battery compartment cover is in place.

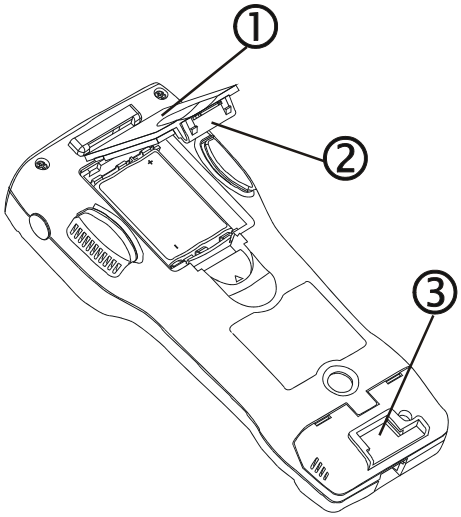

1. Battery Compartment Cover
2. Tab
3. Strap Hook Holder

Figure 1 Inserting the Battery

The main battery pack is located in a compartment on the back of the unit. To insert or replace the battery pack, complete the following steps:

Note: Be sure to turn the unit off before removing the battery. If you don't, you may lose all data in memory.

1. Turn the 2325 off.
2. Detach the elastic handstrap by pulling its hook out of the holder near the base.
3. Firmly press the tab on the battery compartment toward the top of the unit until the compartment cover is released from the body of the unit.
4. Pull the end of the plastic ribbon sticking out of the battery compartment toward the battery pack until it pops out.
5. Remove the battery pack. Lay the plastic ribbon along the bottom of the battery compartment with the end sticking out.
6. Find the positive (+) and negative (-) symbols on the battery pack's label.
7. With *the label facing you*, tilt the positive end of the pack into the upper end of the battery compartment, and firmly press the negative end until it is fully inserted into the battery compartment.
8. Replace the battery compartment cover by sliding it into place. Be sure the plastic ribbon is tucked underneath the cover.
9. Replace the handstrap hook in its holder.

Charging the 2325 Batteries in A Dock

Note: The Vehicle Mount Dock does not have a power source and does not charge the batteries. The Vehicle Mount DC Single Dock is connected to the vehicle's power source and charges the batteries only.

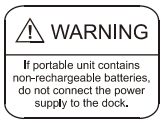

If the 2325 contains non-rechargeable batteries, do not connect the power supply to the dock.

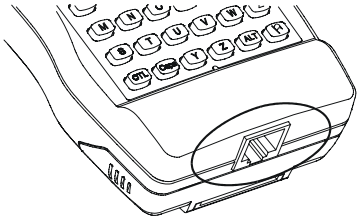

Figure 2 The Serial Port

The serial port on the 2325 must be firmly attached to the connector in the Dock before charging or communications can begin.

Place the 2325 in the dock, with the keypad facing front (on the same side of the dock as the dock indicators). Leave the main battery in the 2325 when placing it in the docking station to recharge the batteries.

The NiMH battery and the backup battery are recharging while the READY light is illuminated on the powered dock.

The charging time in the four slot dock is less than 15 hours.

The charging time in the single dock is less than 3 hours.

Operation

Quick Start

This section's instructions are based on the assumption that your new 2325 is pre-configured and requires only accessory installation (e.g. external barcode scanner) and a power source.

In general, the sequence of events is:

Battery full icon  Power key 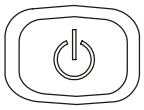

1. Attach the Locking Screw for the PC Card Slot Cover.
2. Insert NiMH battery. A battery icon is displayed at the top right corner of the display when the 2325 is running with a charged battery.
3. Turn the 2325 on by pressing the Power key.
4. Turn the 2325 off by pressing the Power key again.

Power Up

The first time you turn the unit on, you may see the following message:

```
Initial power-up or
critical data loss.
Drive D formatted.
Press any key...
```

This message appears with normal operation and does **not** indicate a problem. Just press the [Enter] key, and the unit will continue to boot up.

This message will also appear when you place new or recharged batteries in the unit after the backup battery has been drained. Again, this is normal and not a problem.

"Please Wait" Messages

With certain types of PC cards installed, the 2325 performs various operations on the card whenever you turn it on or off. While these operations are happening, the unit displays a message in reverse video indicating that it is powering on or off. When turning the unit on, wait until the message disappears before using the unit. When turning the unit off to replace the batteries, wait until the message disappears before removing the batteries.

Auto-Shutoff

The 2325 has an automatic shutoff feature that helps conserve battery life when the unit is not being used. When a specified amount of time (default is 5 minutes) has passed since a key or trigger has been pressed, the unit turns itself off. All data in memory is maintained. Press the Power button to turn the unit back on.

> Instructions for changing the Auto-Off Timer are located in Appendix C in the 2325 Reference Guide.

Laser Trigger

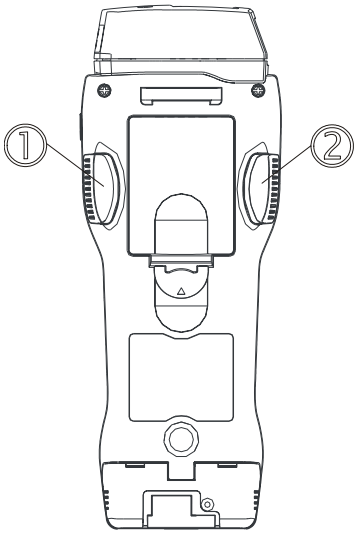

1 Right Trigger

2 Left Trigger

Figure 3 Triggers

Normally, the left trigger (as seen from the front) operates the laser scanner or another barcode reader attached to the unit, and the right trigger toggles the unit in and out of Function mode. The left and right trigger functions can be swapped, allowing the left trigger to toggle the input mode and the right trigger to activate the laser scanner.

To swap trigger operations, press the [FN] key and then press the [SWP] key. Repeat this key sequence to swap them back.

Instructions for allowing the trigger modes to be swapped (Enable Trigger Programmability - default is On) are located in Appendix C in the 2325 Reference Guide.

Keypad

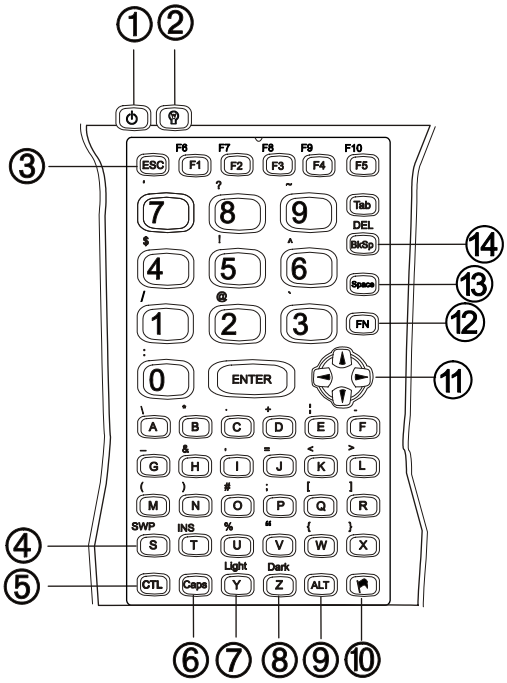

Figure 4 Keypad

1	On / Off	Turn the 2325 on and off.
2	Lamp	Backlight for the display.
3	ESC	Escape key.
4	SWP	Swap left and right triggers.
5	CTL	Control Key.
6	Caps	Caps Lock Key.
7	Light	Brightens the display.
8	Dark	Darkens the display.
9	ALT	
10	Intl key	International character key
11	Cursor Key	Left, right, up and down cursor or screen movement.
12	FN	Function key.
13	Space	
14	BkSp/Del	

Repeating Keystrokes

The 2325 keypad features support for repeating keystrokes. To repeat a keystroke, press and hold the key.

After a brief pause, the keystroke will be automatically repeated until the key is released.

Key Maps

The 2325 does not use the following keys normally found on a computer keyboard:

F11	F12	Pause/Break	Right Alt	Right Ctrl
Scroll Lock	PgDown	PgUp	Print Screen/SysReq	
Home	End	Num Lock	Numeric keypad keys	

The 2325 has a few keys that are not found on a standard computer keyboard. These keys are shown in the following table:

Key	Default Use
	Power key. Turn the unit on and off.
Caps	Caps key. When pressed and released, toggles Caps mode on and off; when held down, acts equivalently to the Shift key on a standard computer keyboard.
	Lamp key. Turns the backlight on and off in the display.
Light Y	Light key. Lightens the background of the display.
Dark Z	Dark key. Darkens the background of the display.
Left laser trigger	Left laser trigger. Operates the laser scanner or an attached barcode reader, can be reprogrammed as a keypad key.
Right laser trigger	Right laser trigger. Same as the FN key; can be reprogrammed as a laser trigger or a keypad key.
FN	FN key. Outputs the symbol or activates the function (F6 - F10) above the next key pressed.
	International key. Outputs an international character generated by the combination of the next two keypresses.

Key	Default Use
SWP S	Swap key. Switches the assigned actions of the right and left laser triggers. The program-trigger icon appears on the display when the SWP key is first pressed.

Note: For information about reprogramming trigger keys as keypad keys, refer to the "2325 Reference Guide."

Keypad Input Modes

Important	When a key is pressed on the 2325 keypad, the result of the keypress depends on the current *input mode*.

- **Type 1 input** mode remains in effect after each keypress until discontinued by user.
- Type 2 input **mode** affects only a single keypress or a combination of keypresses.

Input Mode / Type	Result of Keypress
Normal /Type 1	Outputs the letter (lowercase), number or function on the key.
Caps /Type 1	Outputs the uppercase letter on the key.
FN /Type 2	Outputs the symbol or function above the key.
CTL /Type 2	Outputs the control meaning for alphanumeric or function keys.
ALT /Type 2	Outputs the alternate meaning for alphanumeric or function keys.
/Type 2	Outputs a character from the international character set.

Toggle Mode With Trigger

Normally, the left trigger (as seen from the front) operates the laser scanner or another barcode reader attached to the unit, and the right trigger toggles the unit in and out of Function (FN) mode. The left and right trigger functions can be swapped, allowing the left trigger to toggle the input mode and the right trigger to activate the laser scanner.

To swap trigger operations, press the [FN] key and then press the [SWP] key. Repeat this key sequence to swap them back.

Key Combinations for International Characters

International Characters	Accent or Letter	Letter
á, é, í, ó, ú, É, ç, Ç	‘(apostrophe)	a, e, I, o, u, E, c, C
à, è, ì, ò, ù	`	a, e, I, o, u
â, ê, î, ô, û	^	a, e, I, o, u
ä, ë, ï, ö, ü, ÿ, Ä, Ö, Ü	:	a, e, I, o, u, y, A, O, U
å, Å	@	a, A
ñ, Ñ	None or ~	n, N
ß	s	s
¡, æ, Æ	!	!, e, E
¿	?	?
¡	!	!
¢, £, ¥	$	c, l, y

Figure 5 International Characters Chart

Enter international characters by using the following key sequence:

Intl accent letter

where

Intl is the Intl key (orange key with a flag),

accent is a character from the “Accent or Letter” column, and

letter is a character from the “Letter” column in the same row.

Keypress Sequences

Special Functions

For ...	press ...
Enter	Enter
FN	Right trigger
ESC	ESC
Tab	Tab
DEL	FN+BkSp
BkSp	BkSp
Space	Space
SWP	FN+S
INS	FN+T
Light	FN+Y
Dark	FN+Z
ALT	ALT
International	Flag
Cursor left	Left cursor key
Cursor right	Right cursor key
Cursor up	Up cursor key
Cursor down	Down cursor key

Function Keys

For ...	press ...
F1	F1
F2	F2
F3	F3
F4	F4
F5	F5
F6	FN+F1
F7	FN+F2
F8	FN+F3
F9	FN+F4
F10	FN+F5

Alphanumeric Keys

For ...	press ...
0	0
1	1
2	2
3	3
4	4
5	5
6	6

For ...	press ...
7	7
8	8
9	9
A	CAPS+A
B	CAPS+B
C	CAPS+C
D	CAPS+D
E	CAPS+E
F	CAPS+F
G	CAPS+G
H	CAPS+H
I	CAPS+I
J	CAPS+J
K	CAPS+K
L	CAPS+L
M	CAPS+M
N	CAPS+N
O	CAPS+O
P	CAPS+P
Q	CAPS+Q
R	CAPS+R
S	CAPS+S
T	CAPS+T
U	CAPS+U
V	CAPS+V
W	CAPS+W
X	CAPS+X
Y	CAPS+Y
Z	CAPS+Z
a	A
b	B
c	C
d	D
e	E
f	F
g	G
h	H
i	I
j	J
k	K
l	L
m	M
n	N
o	O
p	P
q	Q
r	R
s	S
t	T
u	U

For ...	press ...
v	V
w	W
x	X
y	Y
z	Z

Punctuation

For ...	press ...
\	FN+A
*	FN+B
. (period)	FN+C
+	FN+D
| (split line)	FN+E
-	FN+F
_ (underscore)	FN+G
&	FN+H
, (comma)	FN+I
=	FN+J
<	FN+K
>	FN+L
(	FN+M
)	FN+N
#	FN+O
;	FN+P
[	FN+Q
]	FN+R
%	FN+U
“	FN+V
{	FN+W
}	FN+X
: (colon)	FN+0
/	FN+1
@	FN+2
`	FN+3
$	FN+4
!	FN+5
^	FN+6
‘ (single quote)	FN+7
?	FN+8
~	FN+9

Display

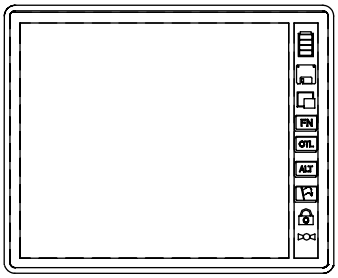

Figure 6 Screen Display with Icons on Right

The display is a backlit LCD of 20 characters in 16 rows. If you enter more than the maximum number of characters, the text will scroll to the left to display the additional characters in the line.

Cleaning the Display and Scan Aperture

Keep fingers and rough or sharp objects away from the scan aperture and display. If the glass becomes soiled or smudged, clean only with a standard household cleaner such as Windex(R) without vinegar or use Isopropyl Alcohol. Do not use paper towels or harsh-chemical-based cleaning fluids since they may result in damage to the glass surface. Use a clean, damp, lint-free cloth. Do not scrub optical surfaces. If possible, clean only those areas which are soiled. Lint/particulates can be removed with clean, filtered canned air.

Displayed Icons and Input Modes

Icons located along the right sign of the display indicate the current input mode.

Icon	Meaning
None	Normal mode. Outputs the letter (lowercase), number or function on the key.
	Low battery warning, may be accompanied by a series of beeps. Turn off the 2325 and recharge or replace the batteries as soon as possible.
	Main and backup batteries are full.
	Internal disk drive is being accessed. Wait until the icon disappears before continuing to use the unit.
	Display panning mode. Used in conjunction with the FN and cursor control keys. When finished, press and release the FN key to return to the current cursor position.

Icon	Meaning
FN	Function mode. Outputs the symbol or activates the function above the next key pressed. Function icon is then removed from the screen.
CTL	Control mode. Outputs the control meaning for alphanumeric or function keys. Control icon is then removed from the screen.
ALT	Alternate mode. Outputs the alternate meaning for alphanumeric or function keys. Alt icon is then removed from the screen.
	International character. Outputs an international character generated by a combination of the next two keypresses. International icon is then removed from screen.
C	Caps input mode. Provides Caps Lock, Left shift and right shift functions. Outputs uppercase character on the key. Press Caps key again to remove icon from screen.
	Programming triggers function. Use SWP to switch the assigned actions of the right and left laser triggers.

Panning the Display

FN key 

Cursor control key 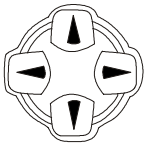

Hold down the [FN] key and use the cursor keys to move the display up, down, to the left, or to the right. The panning icon appears on the right side of the display. When the [FN] key is released, the display snaps back to make the current cursor position visible.

You can also press and release the [FN] key and then move the display several times in one or more directions. When finished, press and release the [FN] key again to return to the current cursor position.

Adjusting the Contrast

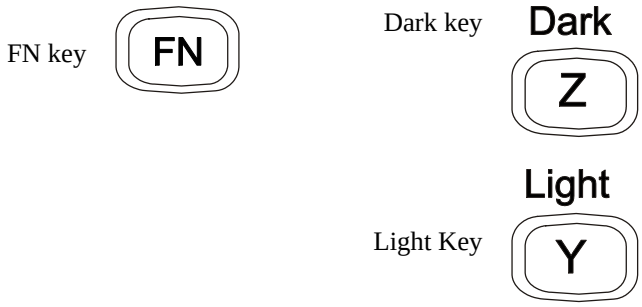

Contrast will adjust the contrast between text and the display background.

Hold down the [FN] key and press the [Dark] key to make the display background darker or the [Light] key to make it lighter. Press the [FN] key again when finished.

You can also press and release the [FN] key and then use the [Light] and [Dark] keys to adjust the contrast. Press and release the [FN] key again when finished.

Using the Backlight

The [Lamp] key is located below the display and is used to turn the backlight on and off. To save battery power, the backlight will shut off automatically if a keypad key is not pressed within a certain amount of time (default is 15 seconds). The backlight will turn on again when any keypad key is pressed.

> Instructions for changing the Backlight Auto-Off Timeout are located in Appendix C in the 2325 Reference Guide.

The Scanner Port

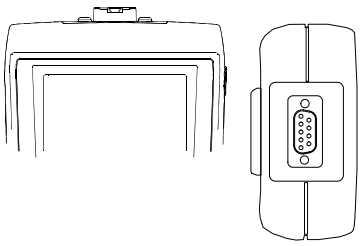

Figure 7 Port for Tethered Scanner

A 2325 without an integrated laser scanning module has a 9 pin scanner connector at the top of the unit to be used with a tethered scanner (not supplied by LXE).

The Antenna

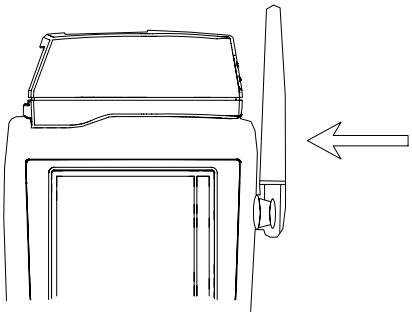

Figure 8 Antenna

Antennas are factory installed on the 2325s that will be used with radio PC cards. Not all 2325s with radios have an integrated laser scanner. For those 2325s that are not configured for radio, a rubber plug is inserted in the antenna opening.

The antenna can be rotated 90° toward the front of the unit and back up again. Do not force the antenna to move past the stopping point.

Laser Scanner

Read all cautions, warnings and labels *before* using the scanner.

Cautions, Labels and Warnings

- Do not look into the laser's lens.
- Do not stare directly into the laser beam.
- Do not remove the laser caution labels from the 2325.

Caution:	*Laser radiation when open. Please read the caution labels.* *Use of controls, adjustments or performance of procedures other than those specified herein may result in hazardous radiation exposure.* *This product uses laser light. The following label is provided on the scanner. Please read the Caution statement.*

Figure 9 Class II Caution Label

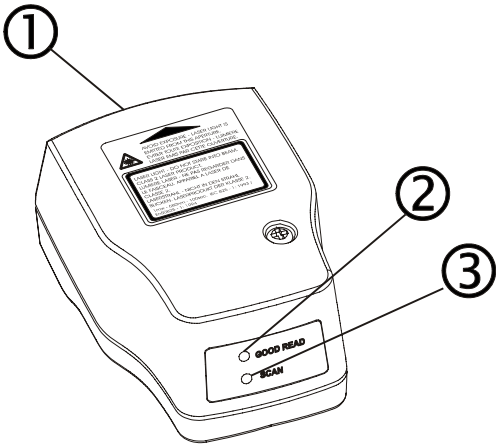

1 Laser scanner aperture

2 Good Read LED

3 Scan LED

Figure 10 Laser Scanner

Using the Laser Scanner

How To

Point the laser window at a barcode and press the trigger that activates the laser.

- A red light emitting diode (LED) on the scanner module (or tethered scanner) indicates when the 2325 is scanning.
- A green LED indicates when a scan is successful.

Do not pour, spray, or spill any liquid on the scanner. The Barcode Scanner contains the circuitry, scanning motor and laser. Handle with appropriate care.

Aiming the Barcode Scanner

Aim the scanner away from you, direct it at the barcode and press the trigger to scan.

The Scan LED turns red to indicate the scanner is on.

Adjust the aim so that the thin, red laser beam covers the entire length of the barcode.

Some scanners use a laser spotting beam which then spreads into a wide beam when the spotting beam timer expires (the default is ½ second). Place the spotting beam in the center of the barcode and hold the scanner steady until the beam spreads and the barcode is decoded.

The scan beam must cross every bar and space on the barcode.

Correct Scan Incorrect Scan Incorrect Scan

Figure 11 Scan Beam

Make sure the barcode is within the scanning range.

The range of a scanner is dependent upon many outside influences including size of the barcode, quality of the barcode printing, material the barcode is printed on, and angle of the scanner beam relative to the barcode label. Any of these factors may result in having to re-scan the label from a different distance or angle.

Distance from Label

Large barcodes can be scanned at the maximum distance. Hold the scanner closer to small barcodes (or with bars that are very close together).

Successful Scan

When the scan is successful, the Good Read LED turns green, the Scan LED is off, and the currently running application (such as ANSI Plus) may produce a distinctive audible tone.

Unsuccessful Scan

When the scan is unsuccessful, the Scan LED remains red and the currently running application (such as ANSI Plus) may produce distinctive audible tones. Check the following:

- Is the scanner programmed for the barcode being read?
- Check the barcode for marks or physical damage e.g. ripped label, missing section, etc.
- Try scanning test symbols of the same code type at different distances and angles.

Cleaning the Scanner Aperture

Keep fingers and rough or sharp objects away from the scan aperture and display. If the glass becomes soiled or smudged, clean only with a standard household cleaner such as Windex® without vinegar or use Isopropyl Alcohol. Do not use paper towels or harsh-chemical-based cleaning fluids since they may result in damage to the glass surface. Use a clean, damp, lint-free cloth. Do not scrub optical surfaces. If possible, clean only those areas which are soiled. Lint/particulates can be removed with clean, filtered canned air.

Long Range Scanner

The long range scanner uses a spotting beam. With the spotting beam aimed at the center of the barcode, the unit is in position to read the barcode with its scanning beam.

The long range scanner may be operated in one of two modes – Spot Beam Timeout and Release Scan. To prevent accidental scanning, both modes require you to hold down the laser trigger to activate the spotting beam.

Spot Beam Timeout Mode

This is the default mode. When the laser trigger is pressed and held down, the laser emits a spotting beam. Aim the beam at the center of the barcode to be scanned. After a short timeout period (the default is ½ second), the laser switches to a full scanning beam and reads the barcode.

> Instructions for changing the Spot Beam Timeout are located in Appendix C in the 2325 Reference Guide.

Release Scan Mode

This mode provides greater control over the spotting beam. When the laser trigger is pressed and held down, the laser emits a spotting beam. The spotting beam stays on, for up to 5 seconds, until the trigger is released. Then the laser switches to full scanning beam and reads the barcode. You can turn off the full scanning beam by pressing and releasing the trigger.

Appendix A Key Maps

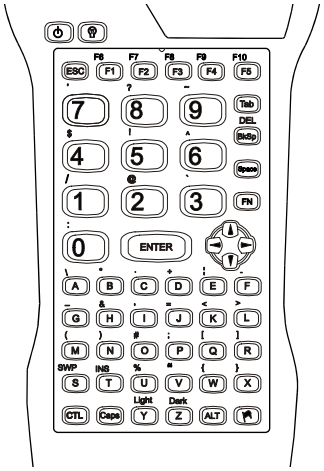

To get this key	Press These Keys and Then					Press this key
	Fn	Shift	Ctl	Alt	Caps	
ESC						ESC
ALT				x		ALT
Swap Triggers (SWP)	x					S
Control Key			x			CTL
Capital Keys					x	Caps
Int'l Characters						Flag Key
Enter						Enter
FN						Right Trigger
Tab						Tab
DEL	x					BkSp
BkSp						BkSp
Space						Space
INS	x					T
Lighten Screen	x					Y
Darken Screen	x					Z
Cursor Left						Left Cursor Key
Cursor Right						Right Cursor Key
Cursor Up						Up Cursor Key
Cursor Down						Down Cursor Key
F1						F1
F2						F2
F3						F3

To get this key	Press These Keys and Then					Press this key
	Fn	Shift	Ctl	Alt	Caps	
F4						F4
F5						F5
F6	x					F1
F7	x					F2
F8	x					F3
F9	x					F4
F10	x					F5
F11						N/A
F12						N/A
\	x					A
*	x					B
. (period)	x					C
+	x					D
| (split line)	x					E
-	x					F
_ (underscore)	x					G
&	x					H
, (comma)	x					I
=	x					J
<	x					K
>	x					L
(	x					M
)	x					N
#	x					O
;	x					P
[	x					Q
]	x					R
%	x					U
"	x					V
{	x					W
}	x					X
: (colon)	x					0 (zero)
/	x					1
@	x					2
`	x					3
$	x					4
!	x					5
^	x					6
' (single quote)	x					7
?	x					8

To get this key	Press These Keys and Then					Press this key
	Fn	Shift	Ctl	Alt	Caps	
~	x					9
0 (zero)						0
1						1
2						2
3						3
4						4
5						5
6						6
7						7
8						8
9						9
A					x	A
B					x	B
C					x	C
D					x	D
E					x	E
F					x	F
G					x	G
H					x	H
I					x	I
J					x	J
K					x	K
L					x	L
M					x	M
N					x	N
O					x	O
P					x	P
Q					x	Q
R					x	R
S					x	S
T					x	T
U					x	U
V					x	V
W					x	W
X					x	X
Y					x	Y
Z					x	Z
a						A
b						B
c						C

To get this key	Press These Keys and Then					Press this key
	Fn	Shift	Ctl	Alt	Caps	
d						D
e						E
f						F
g						G
h						H
i						I
j						J
k						K
l						L
m						M
n						N
o						O
p						P
q						Q
r						R
s						S
t						T
u						U
v						V
w						W
x						X
y						Y
z						Z
Right Alt						N/A
Right Ctrl						N/A
Scroll Lock						N/A
Pause/Break						N/A
Print Screen						N/A
Sys Req						N/A
PgDown						N/A
PgUp						N/A
Num Lock						N/A
Home						N/A
End						N/A
Numeric Keypad						N/A

Appendix B Regulatory Notices and Safety Information

Notice:

The long term characteristics or the possible physiological effects of radio frequency electromagnetic fields have not been investigated by UL.

FCC Information:

This device complies with FCC Rules, part 15. Operation is subject to the following conditions:

1. This device may not cause harmful interference

   and

2. This device must accept any interference that may be received, including interference that may cause undesired operation.

Note: This equipment has been tested and found to comply with the limits for a Class A digital device, pursuant to part 15 of the FCC rules. These limits are designed to provide reasonable protection against harmful interference when the equipment is operated in a commercial environment. This equipment generates, uses, and can radiate radio frequency energy and, if not installed and used in accordance with the instruction manual, may cause harmful interference to radio communications. Operation of this equipment in a residential area is likely to cause harmful interference in which case the user will be required to correct the interference at his own expense.

Warning: Changes or modifications to this device not expressly approved by LXE, Inc., could void the user's authority to operate this equipment.

EMC Directive Requirements:

This is a Class A product. In a domestic environment this product may cause radio interference in which case the user may be required to take adequate measures.

Industry Canada:

This Class A digital apparatus meets all requirements of the Canadian Interference Causing Equipment Regulations. Operation is subject to the following two conditions: (1) this device may not cause harmful interference, and (2) this device must accept any interference received, including interference that may cause undesired operation.

Cet appareil numérique de la classe A respecte toutes les exigences du Règlement sur le matériel brouiller du Canada. Le present appareil numérique n'emet pas de bruits radioélectriques dépassant les limites applicables aux appareils numeriques de le Classe A préscrites dans le Reglement sur le brouillage radioélectrique édits par le ministere des Communications du Canada.

RF Safety Notice:

Caution: *This device is intended to transmit RF energy. For protection against RF exposure to humans and in accordance with FCC rules and Industry Canada rules, this transmitter should be installed such that a minimum separation distance of at least 20 cm (7.8 in.) is maintained between the antenna and the general population. This device is not to be co-located with other transmitters.*

R&TTE Directive Requirements - (Applies only to Equipment operated within the EU/EFTA)

Information to User

A label on the exterior of the device should resemble one of the labels shown below (the label contains the LXE part number of the installed radio card). The labels shown below and affixed to the device, identify where the device may be used and where its use is restricted. Use of a device is prohibited in countries not listed below or otherwise identified by the label. (May or may not include the 0560 Notified Body No.)

Permitted for use in: Austria, Belgium, Denmark, Finland, Germany, Greece, Iceland, Italy, Ireland, Liechtenstein, Luxembourg, Netherlands, Norway, Portugal, Spain, Sweden, Switzerland, and the United Kingdom

Permitted for use in France.

Approvals:

Approvals:

Product	EMI / EMC Standards	Safety Standards
2325	FCC Part 15 Subpart B EN 50022 Class A EN50082-1	EN 60825-1 CDRH Class 2

Transceiver	RF Standards	Notes
480824-3300 (LXE Part No.) LXE 6400 System 2.4GHz Type II PCMCIA Card	FCC Part 15, Subpart C ETS 300 328 IC-RSS 210	Unlicensed Operation Unlicensed Operation Requires License for Outdoor Use
480628-4096 (LXE Part No.) LXE 6500 System 2.4GHz Type II PCMCIA Card	FCC Part 15, Subpart C ETS 300 328 IC-RSS 139 IC-RSS 102 ETS 300 826	Unlicensed Operation Unlicensed Operation Requires License for Outdoor Use
6526 (LXE Model No.) **6726** (LXE Model No.) LXE 6500 / 6700 System 2.4GHz Type II PCMCIA Card	FCC Part 15, Subpart C FCC Part 2 EN 300 328 EN 300 826 IC-RSS 139 IC-RSS 102	Unlicensed Operation Unlicensed Operation Requires License for Outdoor Use
6816 (LXE Model No.) LXE 2.4GHz Type II PCMCIA Card	FCC Part 15, Subpart C FCC Part 2 EN 300 328 EN 300 826 IC-RSS 139 IC-RSS 102	Unlicensed Operation Unlicensed Operation Requires License for Outdoor Use

LXE Transceiver 480628-4096 Declaration of Conformity

LXE
An EMS Technologies Company

DECLARATION OF CONFORMITY

according to Directives:

1999/5/EC	Radio Equipment and Telecommunications Terminal Equipment and the mutual recognition of their conformity
93/68/EEC	**CE Marking Directive**

Type of Equipment:	Direct Sequence 2.4 GHz Wireless LAN Card
Brand Name or Trademark:	LXE
Type Designation:	480628-4096
Manufacturer:	LXE Inc.
Address:	125 Technology Parkway Norcross, GA 30092-2993 USA
Year of Manufacturer:	2000

The following harmonized European Standards, technical specifications, or other normative documents have been applied:

EMI / EMC Standards:

EN 55022 : 1995	Limits and methods of measurement of radio disturbance characteristics of information technology equipment
EN 300 826 : 1997	Electromagnetic compatibility - Generic immunity standard, Part 1: Residential, commercial and light industrial
EN 61000-4-2 : 1995	Electrostatic discharge immunity test
EN 61000-4-3 : 1997	Radiated radio frequency electromagnetic field immunity test
EN 61000-4-6 : 1996	RF conducted immunity test

Radio Frequency Standards:

EN 300 328 : 2000	Radio Equipment and Systems (RES); Wideband transmission systems; Technical characteristics and test conditions for data transmission equipment operating in the 2,4 GHz ISM band and using spread spectrum modulation techniques

Safety Standards:

IEC 950-2: 1991 + Amendments A1..A4	Safety of information technology equipment, including electrical business equipment

We, LXE Inc., declare that the equipment specified above complies with all Essential Health and Safety Requirements of the above Directives and Standards, as amended.

Place:	LXE Inc., Norcross GA USA	Signed:
Date of issue:	1 March, 2000	R. Sam Wismer, RF Approvals Engineer

LXE Inc. 125 Technology Parkway Norcross, GA 30092-2993 USA
ph. 770/447-4224 fax 770/447-6928

LXE Transceiver 480824-3300 Declaration of Conformity

LXE
An EMS Technologies Company

DECLARATION OF CONFORMITY

according to Directives:

1999/5/EC	Radio Equipment and Telecommunications Terminal Equipment and the mutual recognition of their conformity
93/68/EEC	**CE Marking Directive**

Type of Equipment:	Frequency Hopping 2.4 GHz Wireless LAN Card
Brand Name or Trademark:	LXE
Type Designation:	480824-3300
Manufacturer:	LXE Inc.
Address:	125 Technology Parkway Norcross, GA 30092-2993 USA
Year of Manufacturer:	2000

The following harmonized European Standards, technical specifications, or other normative documents have been applied:

EMI / EMC Standards:

EN 55022 : 1995	Limits and methods of measurement of radio disturbance characteristics of information technology equipment
ETS 300 826 : 1997	Electromagnetic compatibility - Generic immunity standard, Part 1: Residential, commercial and light industrial
EN 61000-4-2 : 1995	Electrostatic discharge immunity test
EN 61000-4-3 : 1997	Radiated radio frequency electromagnetic field immunity test
EN 61000-4-6 : 1996	RF conducted immunity test

Radio Frequency Standards:

ETS 300 328 : 1996	Radio Equipment and Systems (RES); Wideband transmission systems; Technical characteristics and test conditions for data transmission equipment operating in the 2,4 GHz ISM band and using spread spectrum modulation techniques

Safety Standards:

IEC 950-2: 1991 + Amendments A1..A4	Safety of information technology equipment, including electrical business equipment

We, LXE Inc., declare that the equipment specified above complies with all Essential Health and Safety Requirements of the above Directives and Standards, as amended.

Place: LXE Inc., Norcross GA USA

Signed: R. Sam Wismer

R. Sam Wismer,
Lead Approvals Engineer

LXE Inc. 125 Technology Parkway Norcross, GA 30092-2993 USA
ph. 770/447-4224 fax 770/447-6928

LXE Transceiver LXE 6526 Declaration of Conformity

LXE
An EMS Technologies Company

DECLARATION OF CONFORMITY

according to Directives:

1999/5/EC	Radio Equipment and Telecommunications Terminal Equipment and the mutual recognition of their conformity
93/68/EEC	**CE Marking Directive**

Type of Equipment:	Direct Sequence 2.4 GHz Wireless LAN Card
Brand Name or Trademark:	LXE
Type Designation:	LXE 6526
Manufacturer:	LXE Inc.
Address:	125 Technology Parkway Norcross, GA 30092-2993 USA
Year of Manufacturer:	2001

The following harmonized European Standards, technical specifications, or other normative documents have been applied:

EMI / EMC Standards:

EN 55022 : 1995	Limits and methods of measurement of radio disturbance characteristics of information technology equipment
EN 300 826 : 1997	Electromagnetic compatibility - Generic immunity standard, Part 1: Residential, commercial and light industrial
EN 61000-4-2 : 1995	Electrostatic discharge immunity test
EN 61000-4-3 : 1997	Radiated radio frequency electromagnetic field immunity test
EN 61000-4-6 : 1996	RF conducted immunity test

Radio Frequency Standards:

EN 300 328 : 1996	Radio Equipment and Systems (RES); Wideband transmission systems; Technical characteristics and test conditions for data transmission equipment operating in the 2,4 GHz ISM band and using spread spectrum modulation techniques

Safety Standards:

EN 60950-2: 1991 + Amendments A1..A4	Safety of information technology equipment, including electrical business equipment

We, LXE Inc., declare that the equipment specified above complies with all Essential Health and Safety Requirements of the above Directives and Standards, as amended.

Place:	LXE Inc., Norcross GA USA	Signed:
Date of issue:	30 March, 2001	R. Sam Wismer, RF Approvals Engineer

LXE Inc. 125 Technology Parkway Norcross, GA 30092-2993 USA
ph. 770/447-4224 fax 770/447-6928

LXE Transceiver LXE 6726 Declaration of Conformity

LXE
An EMS Technologies Company

DECLARATION OF CONFORMITY

according to Directives:

1999/5/EC	**Radio Equipment and Telecommunications Terminal Equipment and the mutual recognition of their conformity**
93/68/EEC	**CE Marking Directive**

Type of Equipment:	Direct Sequence 2.4 GHz Wireless LAN Card
Brand Name or Trademark:	LXE
Type Designation:	LXE 6726
Manufacturer:	LXE Inc.
Address:	125 Technology Parkway Norcross, GA 30092-2993 USA
Year of Manufacturer:	2001

The following harmonized European Standards, technical specifications, or other normative documents have been applied:

EMC:

EN 300 826 : 1997	Electromagnetic compatibility and radio spectrum matters (ERM); Electromagnetic compatibility (EMC) standard for 2,4 GHz wideband transmission systems and high performance radio local area network (Hiperlan) equipment

Radio:

EN 300 328-1 and -2: 2000-7	Radio Equipment and Systems (RES); Wideband transmission systems; Technical characteristics and test conditions for data transmission equipment operating in the 2,4 GHz ISM band and using spread spectrum modulation techniques

Safety:

EN 60950-2: 1992 + A1..A4	Safety of information technology equipment, including electrical business equipment

We, LXE Inc., declare that the equipment specified above complies with all Essential Health and Safety Requirements of the above Directives and Standards, as amended.

Place	LXE Inc., Norcross GA USA
Date of issue	20 November, 2001

D. C. Massey
Lead Regulatory Engineer

LXE Inc. 125 Technology Parkway Norcross, GA 30092-2993 USA
ph. 770/447-4224 fax 770/447-6928

Annex to DoC for LXE 6726

With regard to the use of external antennas

The LXE 6726 can be equipped with external antennas. The antennas listed have been evaluated with the LXE 6726 pursuant to ETSI EN 300 328, and therefore meet the definition of 'dedicated antenna' per ERC/REC 70-03 Appendix 1 Table 3; thus the requirement set forth in ERC/REC 70-03 , Annex 3 are met by the LXE model 6726 transceiver.

Dedicated Antennas for use with LXE 6726

LXE P/N	Antenna Gain	Radio Power Level	Antenna Description
153180-0001	0 dBi	17 dBm	Omni, for LXE VX-series computers
155522-0001	0 dBi	17 dBm	Omni, for LXE MX1-series computers
155814-0001	0 dBi	17 dBm	Patch, for LXE MX1-series computers
157368-0001	0 dBi	17 dBm	Patch, for LXE MX3-series computers
99004-0027	1.8 dBi	17 dBm	3 dB Omni, for LXE model 2325 computer
DAC2450CT1 (Toko P/N)	2.15 dBi	17 dBm	Omni, for LXE MX2-series computers
153179-0001	0 dBi	17 dBm	Omni, Access Point Antenna
153325-0001	0 dBi	17 dBm	Omni, Access Point Antenna
480424-0400	0 dBi	17 dBm	Omni, Access Point Antenna
153599-0001	3 dBi	17 dBm	Omni, Access Point Antenna
153600-0001	3 dBi	17 dBm	Omni, Access Point Antenna
480424-3404	3 dBi	17 dBm	Omni, Access Point Antenna
155846-0001	3 dBi	17 dBm	Spire® Access Point Antenna
155845-0001	6 dBi	13 dBm	Spire® Access Point Antenna
155311-0001	6 dBi	13 dBm	Patch, Access Point Antenna
480424-3411	6 dBi	13 dBm	Patch, Access Point Antenna
480424-3402	6 dBi	13 dBm	Patch, Access Point Antenna
481246-2400	6 dBi	13 dBm	Patch, Access Point Antenna
480424-1702	6 dBi	13 dBm	180° Directional, Access Point Antenna
480424-0411	9 dBi	7 dBm	Omni, Access Point Antenna
480429-2703	12 dBi	7 dBm	90° Directional, Access Point Antenna
480429-0411	12 dBi	7 dBm	Omni, Access Point Antenna
460601-3020	15 dBi	3 dBm	YAGI, Access Point Antenna
460602-3020	15 dBi	3 dBm	YAGI, Access Point Antenna
480429-0415	15 dBi	3 dBm	Omni, Access Point Antenna

D. C. Massey
Lead Regulatory Engineer

20 November 2001

LXE Inc. 125 Technology Parkway Norcross, GA 30092-2993 USA
ph. 770/447-4224 fax 770/447-6928

LXE Transceiver LXE 6816 Declaration of Conformity

LXE®
An EMS Technologies Company

DECLARATION OF CONFORMITY
according to:

the R&TTE Directive;	**99/5/EEC**
The EMC Directive;	**89/336/EEC**
The Low Voltage Directive;	**73/23/EEC**
and the Marking Directive;	**93/68/EEC**

Type of Equipment:	DSSS 2.4GHz WLAN Radio Card
Brand Name or Trademark:	LXE
Type Designation:	6816
Manufacturer:	LXE Inc.
Address:	125 Technology Parkway Norcross, GA 30092 USA

The following harmonized European Norms have been applied:

EMC Standards:	
EN 301 489-1: 07-2000	Electromagnetic compatibility and Radio spectrum Matters (ERM); ElectroMagnetic Compatibility (EMC) standard for radio equipment and services; Part 1: Common technical requirements
EN 301 489-17:07-2000	Electromagnetic compatibility and Radio spectrum Matters (ERM); ElectroMagnetic Compatibility (EMC) standard for radio equipment and services; Part 17: Specific conditions for Wideband data and HIPERLAN equipment
EN 55022: 1998	Limits and methods of measurement of radio disturbance characteristics of information technology equipment
Radio Standards:	
EN 300 328-1 and -2: 2000-7	Radio Equipment and Systems (RES); Wideband transmission systems; Technical characteristics and test conditions for data transmission equipment operating in the 2.4 GHz ISM band and using spread spectrum modulation techniques
Safety Standard:	
EN60950-1: 2001	Safety of information technology equipment, including electrical business equipment

The product carries the CE Mark:

We, LXE Inc., declare that the equipment specified above complies with all Essential Health and Safety Requirements of the above Directives and Standards, as amended.

Date of issue: June 18, 2003

Cyril A. Binnom Jr.
Regulatory Engineer

LXE Inc. 125 Technology Parkway Norcross, GA 30092-2993 USA

ph. 770/447-4224 fax 770/447-6928

Annex to DoC for LXE 6816

With regard to the use of external antennas

The LXE 6816 can be equipped with external antennas. The antennas listed have been assessed with the LXE 6816 pursuant to EN 300 328, and therefore meet the definition of 'dedicated antenna'. The table below lists the maximum output power setting for the radio module in order to result in a total EIRP of 100mW or less. Any combination of output power and a specific type of antenna resulting in an EIRP greater than 100mW is illegal for use throughout the Community and is outside the scope of this DoC. Antennas not listed below are also outside the scope of this DoC.

Dedicated Antennas for use with LXE 6816

LXE Antenna Part Number	LXE Model Number	Antenna Gain	Max Radio Power Level	Antenna Description
153180-0001	N/A	2.2 dBi	17 dBm	Cushcraft Omni Antenna
155846-0001	6000A279ANT3SPIREL 6000A280ANT3SPIRER 6000A283ANT3INDSPR	3 dBi	17 dBm	Spire® Omni Antenna
155845-0001	6000A277ANT6SPIREL 6000A278ANT6SPIRER 6000A282ANT3INDSPR	6 dBi	13 dBm	Spire® Omni Antenna
480424-0411	N/A	9 dBi	11 dbm	Mobile Mark Omni Antenna
155104-0001	N/A	0 dbi	20 dbm	LXE Omni
154591-0001	N/A	0 dbi	20 dbm	LXE Patch
Toko DAC2450CT1	N/A	0 dbi	20 dbm	LXE Omni
157368-0001	N/A	0 dbi	20 dbm	LXE Omni
158586-0001	N/A	0 dbi	20 dbm	LXE Omni
158399-0001	N/A	0 dbi	20 dbm	LXE Omni

Cyril A. Binnom Jr.
Regulatory Engineer
18 June 2003

LXE Inc. 125 Technology Parkway Norcross, GA 30092-2993 USA
ph. 770/447-4224 fax 770/447-6928

Laser Light Safety Statement

Warning:

This product uses laser light. One of the following labels is provided on the scanner. Please read the Caution statement. (US)

Mise én garde:

Ce produit utilise un rayon laser. L'une des étiquettes suivantes est apposée sur le scanneur. Veuillez lire l'avertissement qu'elle contient. (FR)

Advertência:

Este produto usa luz de laser. O scanner contém um dos seguintes avisos. Favor ler o Aviso. (PT)

Varning:

Denna produkt använder laserljus. En av de nedanstående etiketterna sitter på scannern. Var god läs varningstexten. (SE)

Advarsel:

Dette produkt anvender laserlys. En af følgende mærkater anvendes på scanneren. Læs venligst sikkerhedsforanstaltningen. (DK)

Varoitus:

Tämä tuote käyttää laservaloa. Skannerissa on jokin seuraavista tarroista. Lue Huomio-kohta. (FI)

Warnung:

Dieses Produkt verwendet Laserlicht. Eines der folgenden Etiketten befindet sich auf dem Scanner. Bitte lesen Sie den Gefahrenhinweis. (DE)

Attenzione:

Questo prodotto utilizza luce laser. Una delle etichette seguenti c' ubicata sullo scanner. Si raccomanda di leggere con attenzione le avvertenze riportate. (IT)

Advarsel:

Dette utstyret bruker laserlys. En av følgende etiketter er plassert på scanneren. Les advarselen på etiketten. (NO)

Advertencia:

Este producto usa luz de láser. Las etiquetas se proveen en la máquina exploradora. Por favor, lea detenidamente la explicación para las precauciones. (ES)

Waarschuwing:

Dit product gebruikt laserlicht. Een van de volgende labels is op de scanner aangebracht. Lees a.u.b. de waarschuwing onder Oppassen. (NL)\

Laser Light Safety Statement

Uyarý: Bu ürün lazer ýþýðý kullanýr. Aþaðýdaki etiketlerden bir tanesi tarayýcýnýn üstünde saðlanýr. Lütfen Dikkat ifadesini okuyun. (TR)	**Προειδοποίηση:** Αυτό το προϊόν χρησιμοποιεί λέιζερ φως. Υπάρχει μία από τις ακόλουθες ετικέτες στο σαρωτή. Παρακαλούμε διαβάστε τη δήλωση με τίτλο Προσοχή. (GR)
경고: 본 제품은 레이저 광선을 사용합니다. 다음 라벨 중 하나가 스캐너에 제공됩니다. 주의 사항을 읽어 주십시오. (KR)	**警告:** この製品はレーザー光線を使用します。 次のラベルのうち１つがスキャナーに貼られています。 注意事項をお読みください。(JP)
警告： 本产品使用激光。 下列一个标签将随扫描仪一道提供。 请阅读“当心”一栏的内容。(CN)	**Legend:** Chinese-CN; Danish-DK; Dutch-NL; English-US; Finnish-FI; French-FR; German-DE; Greek-GR; Italian-IT; Japanese-JP; Korean-KR; Norwegian-NO; Portuguese-PT; Spanish-ES; Swedish-SE; Turkish-TR

Label

2325 Hand Held Terminal

Lithium Battery Safety Statement

Caution:
Lithium battery inside. Danger of explosion if battery is incorrectly replaced. Replace only with same or equivalent type recommended by battery manufacturer. (US)

Attention:
Contient une pile de lithium. Risque d'explosion dans le cas où la pile ne serait pas correctement remplacée. Remplacer uniquement avec une pile semblable ou equivalente au type de pile recommandé par le fabricant. (FR)

Forsigtig:
Indeholder lithiumbattterier. Risiko for eksplosion, hvis batteriet udskiftes forkert. Må kun udskiftes med samme eller tilsvarende type, som anbefalet af fabikanten. (DK)

Varoitus:
Tämä tuote käyttää laservaloa. Skannerissa on jokin seuraavista tarroista. Lue Huomio-kohta. (FI)

Vorsicht:
Enthält Lithium-Batterie. Bei unsachgemäßem Ersatz besteht Explosionsgefahr. Nur durch gleichen oder vom Hersteller empfohlenen Typ ersetzen. (DE)

Attenzione:
Batteria al litio. Pericolo di esplosione qualora la batteria venga sostituita in maniera scorretta. Sostituire solo con lo stesso tipo o equivalente consigliato per il fabbricante. (IT)

Atenção:
Contém pilha de lítio. Há perigo de explosão no caso de uma substituição incorreta. Substitua somente pelo mesmo tipo, ou equivalente, recomendado pelo fabricante. (PT)

Varning:
Innehåller litiumbatteri. Fara för explosion om batteriet är felaktigt placerat eller av fel typ. Använd endast samma eller motsvarande typ batterier rekommenderade av tillverkaren. (SE)

Advarsel:
Innmontert Lithium batteri. Eksplosjonsfare ved feil montering av batteri. Benytt kun batteri anbefalt av produsent. (NO)

Cuidado:
Pila de litio adentro. Peligro de explosión si la pila se reemplaza incorrectamente. Reemplace solamente con el mismo tipo o equivalente recomendado por el fabricante. (ES)

Oppassen:
Bevat Lithium-batterij. Incorrrecte plaatsing van batterij kan leiden tot explosiegevaar. Alleen vervangen door hetzelfde of door fabrikant aanbevolen gelijkwaardig type. (NL)

Lithium Battery Safety Statement

Προσοχή: Υπάρχει μπαταρία από λίθιο εσωτερικά. Υπάρχει κίνδυνος έκρηξης εάν η μπαταρία αντικατασταθεί με λανθασμένο τρόπο. Αντικαταστήστε μόνο με τον ίδιο ή ισοδύναμο τύπο που συνιστάται από τον κατασκευαστή. (GR)	**주의:** 리튬 배터리 내부. 배터리가 잘못 설치되었을 경우 폭발의 위험이 있습니다. 동일한 배터리, 또는 배터리 제조업체가 권장하는 배터리로 교체하십시오. (KR)
注意: リチウム電池が入っています。間違った種類の電池を使用すると、破裂する恐れがあります。同じ電池、または電池製造元が推奨する同等の電池を使用してください。 (JP)	**小心:** 内装锂电池。如电池更换不当，则有发生爆炸的危险。只能用电池制造商推荐的相同或同等电池进行更换。 (CN)
Dikkat: İçinde lityum bataryası bulunur. Bataryanın yanlış değiştirilmesi patlama tehlikesi yaratır. Aynısıyla veya üreticinin önerdiği eşdeğer tiple değiştirin. (TR)	

Legend:

Chinese	CN	Italian	IT
Danish	DK	Japanese	JP
Dutch	NL	Korean	KR
English	US	Norwegian	NO
Finnish	FI	Portuguese	PT
French	FR	Spanish	ES
German	DE	Swedish	SE
Greek	GR	Turkish	TR

Index

L

M

N

P

Q

R

S

T