DENSO

QR Code Scanner

QS20P

User's Manual

Specifications are subject to change without prior notice.

- DENSO CORPORATION does not assume any product liability arising out of, or in connection with, the application or use of any product, circuit, or application described herein.
- Intellectual Property Precaution

  DENSO CORPORATION ("DENSO") takes reasonable precautions to ensure its products do not infringe upon any patent of other intellectual property rights of other(s), but DENSO cannot be responsible for any patent or other intellectual property right infringement(s) or violation(s) which arise from (i) the use of DENSO's product(s) in connection or in combination with other component(s), product(s), data processing system(s) or equipment or software not supplied from DENSO; (ii) the use of DENSO's products in a manner for which the same were not intended nor designed; or (iii) any modification of DENSO's products by other(s) than DENSO.

Preface

Please READ through these operating instructions carefully. It will enable you to operate your QS20P correctly.

After you have finished reading the instructions, keep this manual handy for speedy reference.

Be sure to observe all these safety precautions.

- Please READ through this manual carefully. It will enable you to use the QS20P correctly.
- Always keep this manual nearby for speedy reference.

Strict observance of these warning and caution indications are a MUST for preventing accidents which could result in bodily injury and substantial property damage. Make sure you fully understand all definitions of these terms and related symbols given below, before you proceed to the text itself.

⚠ **WARNING**	Alerts you to those conditions which could cause serious bodily injury or death if the instructions are not followed correctly.
⚠ **CAUTION**	Alerts you to those conditions which could cause minor bodily injury or substantial property damage if the instructions are not followed correctly.

Meaning of Symbols

A triangle (△) with a picture inside alerts you to a warning of danger. Here you see the warning for electrical shock.

A diagonal line through a circle (⃠) alerts you to something you should not do; it may or may not have a picture inside. Here you see a screwdriver inside the circle, meaning that you should not disassemble.

A black circle (●) with a picture inside alerts you to something you MUST do. This example shows that you MUST unplug the power cord.

- When designing systems such as medicine management system that could affect people's lives, take potential dangers into serious consideration and make redundancy systems and safety engineering which render those dangers even if data is entered incorrectly.

- Never disassemble or heat the battery cartridge, nor put it into fire or water; doing so could cause battery-rupture or leakage of battery fluid, resulting in a fire or bodily injury.

- Do not carry or store the battery cartridge together with metallic ball-point pens, necklaces, coins, hairpins, etc.

  Doing so could short-circuit the terminal pins, causing the batteries to rupture or the battery fluid to leak, resulting in a fire or bodily injury.

- Avoid dropping the battery cartridge or letting it undergo any shock or impact.

  Doing so could cause the batteries to break, generate heat, rupture or burn.

- Only use the dedicated charger (C-700) for charging the battery cartridge.

  Using a different type of charger could cause battery-rupture or leakage of battery fluid and result in a fire, bodily injury, or serious damage to property.

- Never charge the battery cartridge where any inflammable gases may be emitted; doing so could cause fire.

- Never bring any conductive materials into contact with the connector terminals on the power supply box.

  Doing so could produce a large current through the power supply box, resulting in heat or fire, as well as damage to the power supply box.

- Keep the QS20P and its accessories away from water or moisture.

  Getting the QS20P or its accessories wet could result in a fire or electrical shock.

- Do not subject the scanning window of the QS20P to direct sunlight for extended periods.

  Doing so could damage the QS20P, resulting in a fire.

- Do not put the QS20P or its accessories on an unstable or inclined plane.

  They may drop, creating injuries.

- Never put the QS20P or its accessories in places where there are excessively high temperatures, such as inside closed-up automobiles, or in places exposed to direct sunlight.

  Doing so could affect the housing or parts, resulting in a fire.

- Avoid using the QS20P and its accessories in extremely humid or dusty areas, or where there are drastic temperature changes.

  Moisture or dust will get into the QS20P or its accessories, resulting in malfunction, fire or electrical shock.

- Do not place the QS20P or its accessories anyplace where they may be subjected to oily smoke or steam, e.g., near a cooking range or humidifier.

  Doing so could result in a fire or electrical shock.

- Never disassemble or modify the QS20P or its accessories; doing so could result in an accident such as break or fire.

  Never disassemble

- If you will not be using the QS20P for a long time, be sure to remove the battery cartridge from the power supply box for safety.

  Failure to do so could result in a fire.

- Do not scratch or modify the QS20P, its scanner cable, or interface cable. Do not bend, twist, pull, or heat those cables.

  Doing so could damage the QS20P, its scanner cable, or interface cable, creating a fire hazard.

- Do not put heavy material on the QS20P, its scanner cable, or interface cable, or allow those cables to get pressed under heavy material.

- Do not look into the light source from the scanning window of the QS20P or do not point the scanning window at other people's eyes.

  Eyesight may be damaged by direct exposure to this light.

- Do not use the QS20P if your hands are wet or damp.

  Doing so could result in an electrical shock.

- Never use chemicals or organic solvents such as benzene and thinner to clean the housing. Do not apply insecticide to the QS20P or its accessories.

  Doing so could result in a marred or cracked housing, electrical shock or fire.

- If the scanner cable or interface cable is damaged (e.g., exposed or broken lead wires), stop using it and contact your nearest dealer.

  Failure to do so could result in a fire or electrical shock.

- Never charge a wet or damp battery cartridge.

  Doing so could cause the batteries to break, generate heat, rupture, or burn.

- If smoke, abnormal odors or noises come from the QS20P, immediately turn off the power switch of the power supply box, remove the battery cartridge from the power supply box, and contact your nearest dealer.

  Failure to do so could cause fire or electrical shock.

- If foreign material or water gets into the QS20P, immediately turn off the power switch of the power supply box, remove the battery cartridge from the power supply box, and contact your nearest dealer.

  Failure to do so could emit smoke or cause fire.

- If you drop the QS20P or its accessories so as to damage their housings, immediately turn off the power switch of the power supply box, remove the battery cartridge from the power supply box, and contact your nearest dealer.

  Failure to do so could emit smoke or cause fire.

- Do not use batteries or power sources other than the specified ones; doing so could generate heat or cause malfunction.

Clean the housings of the QS20P and its accessories and battery cartridge terminals with a dry, soft cloth.

- Never use benzene, alcohol, or other organic solvents. The housings may be marred or the paint may come off.
- *If the QS20P or its accessories become smudged, moisten a soft cloth with* neutral detergent diluted with water and wring it out thoroughly. Wipe the QS20P or its accessories with the cloth and then go over it again with a dry cloth.

Dust or dirt accumulating on the clear plate of the scanning window will affect reading performance. If you use the QS20P in dusty areas, therefore, periodically check the clear plate of the scanning window and clean it if dusty.

- To clean the plate, first blow the dust away with an air brush. Then wipe the plate with a cotton swab or the similar soft one gently.
- *If sand or hard particles have accumulated, never rub the plate; doing so will* scratch or damage it. Blow the particles away with an air brush or a soft brush.

Content Overviews

Chapter 1. Components in Package

- QS20P

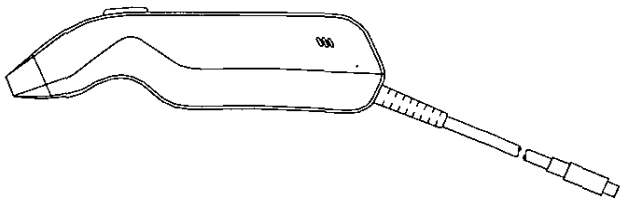

- Power supply box

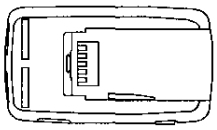

- Battery cartridge

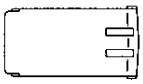

- RS-232C interface cable

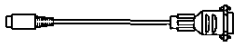

- User's manual (this book)

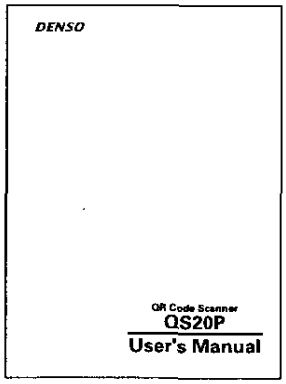

Chapter 2. Names and Functions

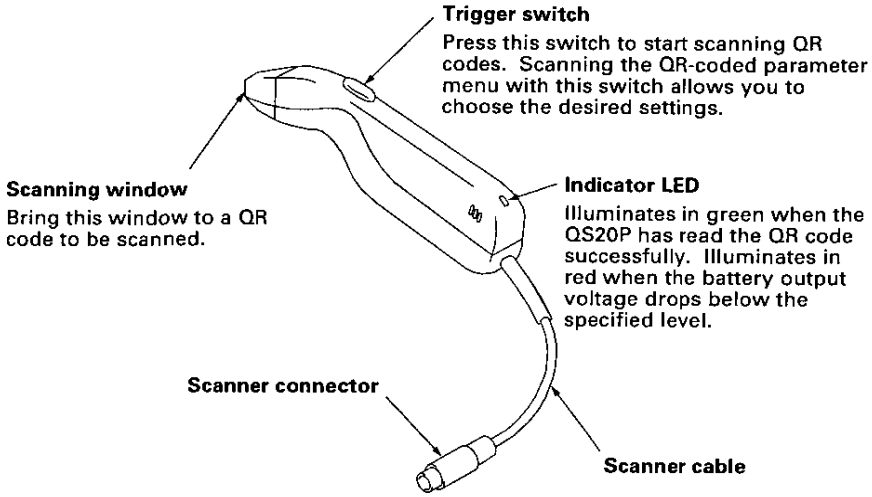

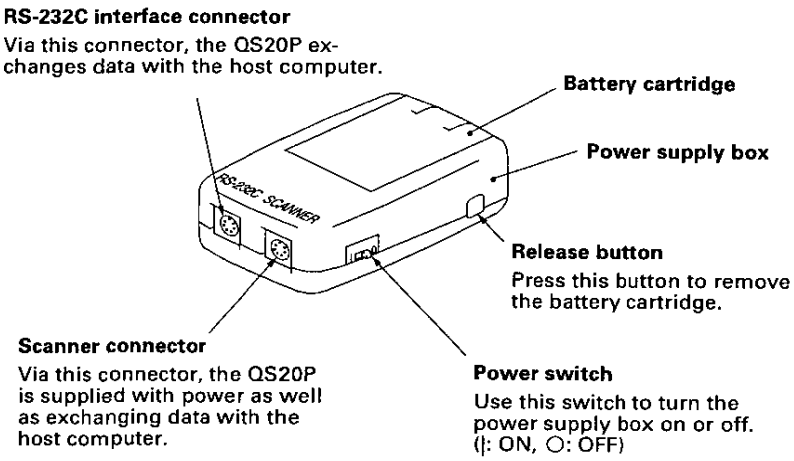

Chapter 3. Preparation

3.1 Loading the Battery Cartridge

Before the first use of the QS20P, be sure to charge and load the battery cartridge which comes with the QS20P according to the steps below.

(1) Charge the battery cartridge with the dedicated charger C-700 (option). For *the charging procedure, refer to the "C-700 User's Manual."*

(2) Push the battery cartridge into the power supply box until it clicks into place. (To remove the battery cartridge, press the release button.)

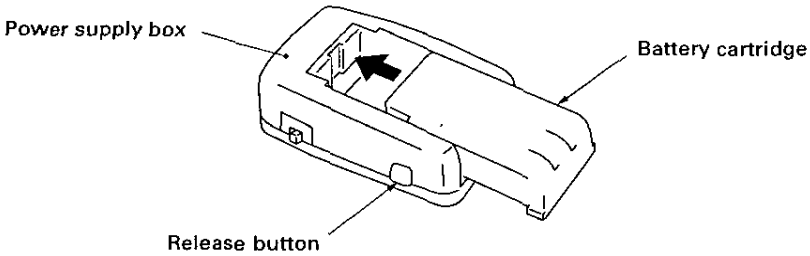

NOTE Do not touch the electric nodes (metal sections) of the battery cartridge. Doing so will result in contact failure or broken battery cartridge due to static electricity charged in your body.

TIP *Service Life of Battery Cartridge:* Lithium-ion batteries used in the battery cartridge will gradually deteriorate during the repeated cycles of charging and discharging due to its properties, even under normal use. When the battery service period becomes shortened due to its deterioration even if it has been charged for the specified hours, replace the battery cartridge with a new one. Generally it is necessary to replace the battery cartridge after it has undergone approx. 300 cycles of charging and discharging operation.

3.2 Connecting the QS20P to the PC via the Power Supply Box

(1) Turn the power switch of the power supply box to the OFF (O) position.

(2) Connect the scanner cable and RS-232C interface cable to the power supply box.

Connect the other end of the RS-232C interface cable to the host computer.

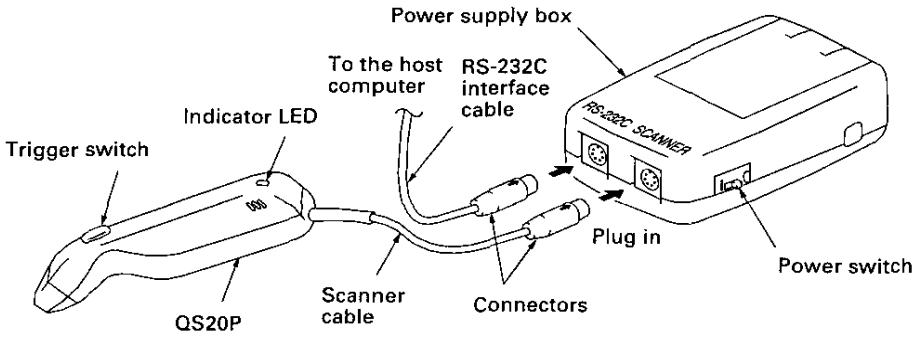

(3) Turn the power switch of the power supply box to the ON (|) position, then press the trigger switch and check that the illumination LED lights in red.

NOTE Do not plug or unplug the scanner cable or RS-232C interface cable at an angle. Do not mistake the RS-232C connector for the scanner connector provided in the power supply box. When plugging in those connectors, be careful with their orientation. Incorrect connection will result in a scanner failure, power supply box failure, or broken connector pins.

NOTE When unplugging connectors, hold the connector housings not the cables. Pulling those cables may break them.

NOTE Avoid repeating plugging/unplugging of the connectors. Doing so will result in a contact failure of connectors or shortened battery working time due to increased contact resistance.

NOTE If pressing the trigger switch lights the indicator LED in red, it means that the battery output voltage is low. Charge the battery cartridge or replace it with a new one.

3.3 Modifying the Defaults

The communications conditions, reading modes, and other settings have been set when the QS20P leaves the factory (Refer to the parameters and defaults listed in Chapter 6). You may modify those defaults by using the QR-coded parameter menu given in Chapter 7.

Settings made from the QR-coded parameter menu will be stored in the memory of the QS20P, so they will be retained even after the QS20P is powered off.

Chapter 4. Scanning Codes

(1) Turn the power switch of the power supply box to the ON (|) position.

(2) Point the scanning window at the center of a target code and bring it into contact with the label.

(3) Press the trigger switch. The illumination LED lights in red.

(4) When the QS20P has read the code successfully, the indicator LED will illuminate in green and the beeper sounds.

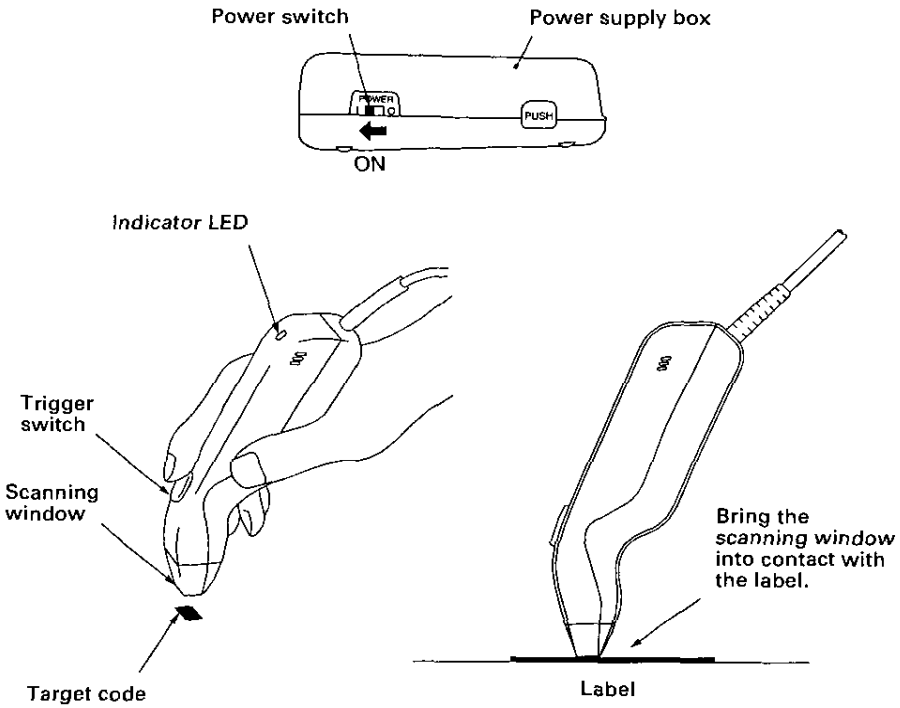

- If the QS20P fails to read due to specular effects or other factors, change the scanning angle of the scanning window or the distance from labels, and try it again. (Specular effects occur when the reflection of the light from the label surface becomes excessively strong. This can easily happen when the reflecting surface is polished or covered with vinyl.)

- Allow only a single QR code to come within the scanning range. If two or more codes lie within the scanning range at the same time, the QS20P may fail to read or continue reading those codes alternately.
- The QS20P can read QR codes omnidirectionally. Note that the target code including the margin should lie within the scanning range.
- The time required to read a QR code is proportional to the volume of data contained in the code. If you scan a QR code containing a large volume of data with the QS20P, it may take time. Scanning low-quality codes may also take time for completion of reading.
- Disabling reading of unnecessary types of codes may increase the scanning speed.

NOTE Before reading labels, clean them if stained.

NOTE Avoid using the QS20P in direct sunlight. The QS20P might fail to read correctly.

Chapter 5. Features

Scanning

If you turn the power switch of the power supply box to the ON (|) position and press the trigger switch, the QS20P will turn the illumination LED on and become ready to scan. It will take approx. one second to make the QS20P ready for scan after depression of the trigger switch. Bringing the scanning window into contact with a target code will cause the QS20P to read the QR code and send it to the connected PC or external equipment automatically.

After the QS20P sends data or after any trigger switch operation (which may differ depending upon the trigger switch operation mode as described below), the QS20P will turn the illumination LED off and go into the standby mode. After the specified time, the QS20P will automatically power itself off. You may modify the automatic powering-off time by using the QR-coded parameter menu given in Chapter 7.

Pressing the trigger switch in the standby mode will make the QS20P ready for scanning approximately 0.1 second later.

NOTE If you will not be using the QS20P for a long time or you will carry it, be sure to turn the power switch of the power supply box to the OFF (○) position. This is to prevent the QS20P from getting powered on if the trigger switch is accidentally pressed.

Trigger switch control

The trigger switch is available in four operation modes—Auto-off mode, Momentary switching mode, Alternate switching mode, and Continuous reading mode. You may switch between those modes from the QR-coded parameter menu given in Chapter 6.

(1) Auto-off mode

Holding down the trigger switch lights the illumination LED for a maximum of 5 seconds during which the QS20P is ready to scan. If you release the trigger switch or when the QS20P completes code reading, the QS20P turns the illumination LED off and goes into the standby mode.

(2) Momentary switching mode

Only while you hold down the trigger switch, the illumination LED lights and the QS20P is ready to scan. Releasing the trigger switch turns the illumination LED off and places the QS20P in the standby mode.

(3) Alternate switching mode

Pressing the trigger switch turns the illumination LED on and makes the QS20P ready to scan. Even if the trigger switch is released, the illumination LED remains on until a code is read successfully or you press the trigger switch again. Pressing the trigger switch toggles the "ready to scan" and "in standby mode" (the illumination LED on and off).

(4) Continuous reading mode

Once you press the trigger switch, the QS20P turns the illumination LED on and becomes ready to scan. That ready status will be kept for the specified time. If no scanning operation is carried out within the specified time, the QS20P will automatically turn itself off.

Re-read prevention

The QS20P supports the re-read prevention so that it will not read same codes in succession. If the QS20P fails to read, therefore, you need to release the trigger switch or pull the scanning window away from the target code for at least one second for canceling the re-read prevention and then try scanning again.

For low-quality labels which cannot be read for more than one second, the QS20P *might read same codes in succession at intervals of more than one* second.

Reading black-and-white inverted QR codes

The QS20P can read white QR codes on black background. You may switch between "Black code on white background" and "White code on black background" by using the QR-coded parameter menu given in Chapter 7.

Reading split QR codes (registered as "Structured Append" at AIM)

A QR code (except MicroQR) can be split into a maximum of 16 blocks. The QS20P can read split QR codes. Two reading modes of split QR codes are available—Edit mode and Non-edit mode. In the Edit mode, the QS20P edits scanned split codes and transfers the restored data to the PC; in the Non-edit mode, each time the QS20P reads a single split code, it transfers the data to the PC. You may switch between those modes by using the QR-coded parameter menu given in Chapter 7.

When reading split QR codes, the QS20P beeps in a different way from usual. That is, when the QS20P reads the first split code, it beeps twice and enters the split code scanning mode. After that, each time it reads the subsequent split *code, it beeps once. If the QS20P reads the last split code, it beeps three times* and completes the sequence of split code scanning.

NOTE If you scan any non-split code midway in a sequence of split code scanning, the QS20P cancels the split code scanning mode and sends those split codes scanned to the PC.

NOTE In the sequence of the split code scanning, if the QS20P goes into the standby mode in the Auto-off mode (that is, if five seconds has passed after you pressed the trigger switch or if you release the trigger switch within five seconds) or if the split code scanning interval exceeds approx. three seconds in the trigger switch operation modes except the Auto-off mode, the QS20P discards the split codes scanned and cancels the split code scanning mode.

NOTE Before completion of the current sequence of split code scanning, if you scan any other split code, the QS20P discards the split codes scanned and starts a new sequence of split code scanning.

Up to 8 kilobytes of data transferable in Edit mode

In Edit mode, QS20P can read split codes of up to 8-kilobyte data, store and edit them, and then transfer the restored data to the PC. If a restored code contains data exceeding 8 kilobytes, the QS20P will cause a reading error and clear the restored data.

Supporting QR codes

The QS20P can read the following codes:

QR codes: Model 1, Model 2, and MicroQR

Chapter 6. Parameters and Defaults

The table below lists the parameters and their default values. Note that the defaults given below are values preset when the QS20P leaves the factory. Some of the communications parameters and reading mode settings may have been modified by dealers according to your needs.

You may change parameters given in the table below by using the QR-coded parameter menu given in Chapter 7.

Parameter group	Parameters	Function	Factory defaults
Communications procedure		Non-acknowledge mode ACK/NAK mode	√
Communications conditions	CTS control	Enabled Disabled	√
	Transmission rate	4800 bps 9600 bps 19200 bps 38400 bps 57600 bps 115200 bps	√
	Character length	8 bits 7 bits	√
	Parity check	No Even parity Odd parity	√
	Stop bit	1 bit 2 bits	√
Transmission format	Header	None STX	√
	Terminator	ETX CR LF CR LF	√
	Transmission of code ID mark (see p. 16)	Disabled Enabled	√
	Transmission of no. of digits	Disabled Enabled	√
	Transmission of BCC (Note 1)	Disabled Enabled	√

(Note 1: BCC is disabled automatically if no header is selected.)

Parameter group	Parameters	Function	Factory defaults
Reading modes	Reading QR codes	Model 1	
		Model 2	
		MicroQR	
		Model 1 and Model 2	
		Model 1, Model 2, and MicroQR	√
	Reading black-and-white inverted QR codes	Black code on white background	√
		White code on black background	
	Edit/Non-edit mode for split QR codes ("Structured Append")	Edit mode	√
		Non-edit mode	
Other settings	Trigger switch control	Auto-off mode	√
		Momentary switching mode	
		Alternate switching mode	
		Continuous reading mode	
	Beeper control	Disabled	
		Enabled	√
	Beeper volume	High	√
		Medium	
		Low	
	Indicator LED	Disabled	
		Enabled	√
	Powering-off timer	1 minute	
		3 minutes	√
		5 minutes	
		10 minutes	
		30 minutes	
		Disabled	
	RS-232C driver when the QS20P is in standby mode*	On standby	√
		In operation	

* Some models do not support this parameter.

Chapter 7. QR-coded Parameter Menu

The QR-coded parameter menu allows you to change a variety of functions built in the QS20P according to the procedure below.

Parameter change procedure

NOTE During the following procedure, the QS20P is automatically placed in the Auto-off mode, regardless of the current trigger switch control setting. The beeper will sound and the indicator LED will illuminate even if the beeper and indicator LED are currently set to Disabled.

(1) Make the QS20P ready for scan.

(2) Scan the "Start setting" code in the menu control shown on the next page.

NOTE: If the "White code on black background" reading is selected in the QS20P, scan the black-and-white inverted "Start setting" code.

(3) Scan a QR code(s) of the parameter(s) you want to set.

(4) Scan the "End setting" code in the menu control.

This stores new settings in the memory and completes the parameter change procedure. The QS20P will become ready to scan. If you turn off the power, those new settings will be retained.

NOTE: If you turn off the power without scanning the "End setting" code, new settings you made will be canceled.

To restore factory defaults, scan the "Defaults" code in the menu control.

To cancel the parameter change procedure, scan the "Cancel" code.

■ Menu control

"Start setting"

(When the "White code on black background" is selected)

"Cancel"

"Defaults"

"End setting"

■ Communications procedure

"Non-acknowledge mode" (default)

"ACK/NAK mode"

■ Communications conditions

CTS control

Disabled (default)		Enabled	

Transmission rate

"4800 bps"		"9600 bps"	
"19200 bps"		"38400 bps" (default)	
"57600 bps"		"115200 bps"	

Character length

"7 bits"		"8 bits" (default)	

Parity check

"No" (default)			
"Even parity"		"Odd parity"	

Stop bit length

"1 bit" (default)		"2 bits"	

■ Transmission format

Header

"None" (default)		"STX"	

Terminator

"ETX"		"CR" (default)	
"LF"		"CR LF"	

Transmission of code ID mark

"Disabled" (default)		"Enabled"	

Transmission of no. of digits

"Disabled" (default)		"Enabled"	

Transmission BCC

"Disabled" (default)	"Enabled"

■ Reading modes

QR code model (to be scanned)

Model 1	Model 2	MicroQR
Model 1 and Model 2	Model 1, Model 2, and MicroQR (default)	

Reading black-and-white inverted QR codes

"Black code on white background" (default)	"White code on black background"

Edit/Non-edit mode for split QR codes ("Structured Append")

"Edit mode" (default)		"Non-edit mode"	

■ Other settings

Trigger switch control

"Auto-off mode" (default)		"Alternate switching mode"	
"Momentary switching mode"		"Continuous reading mode"	

Beeper control

"Disabled"		"Enabled" (default)	

Beeper volume

Low	Medium	High (defaults)

Indicator LED

"Disabled"	"Enabled" (default)

Powering-off timer

1 minute	3 minutes (default)	5 minutes
10 minutes	30 minute	Disabled

RS-232C driver when the QS20P is in standby mode

On standby	In operation

Chapter 8. Communications

The QS20P communicates with the connected PC or external equipment in accordance with the RS-232C. You may set various communications conditions by scanning QR-coded parameters printed in Chapter 7.

■ Communications flow

You may select either the non-acknowledge mode or the ACK/NAK mode.

Non-acknowledge mode

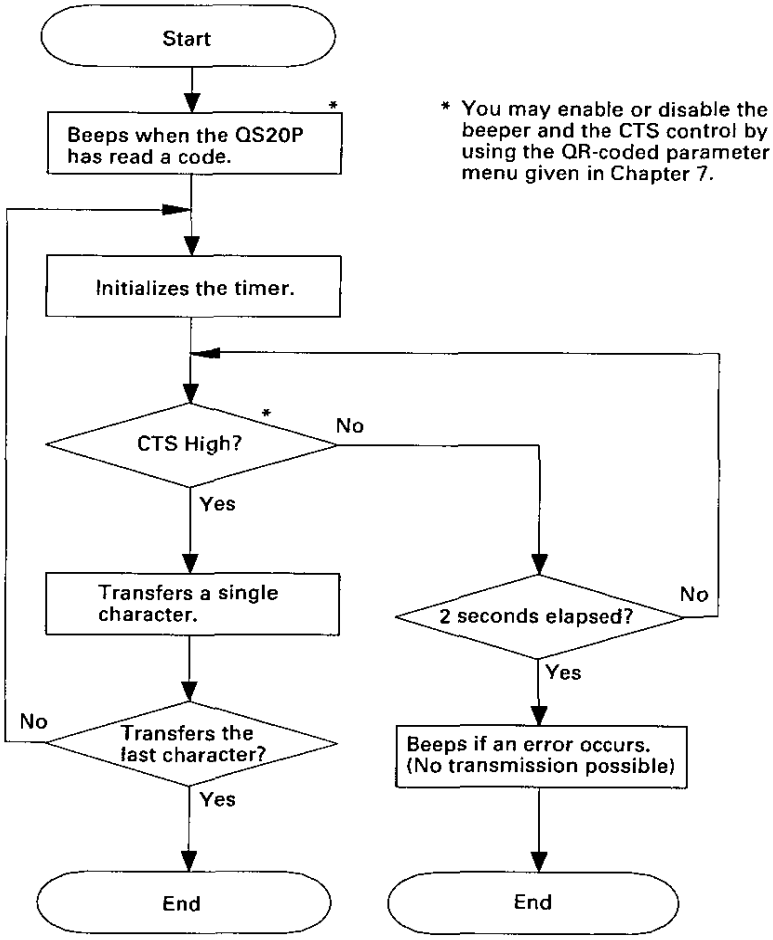

ACK/NAK mode

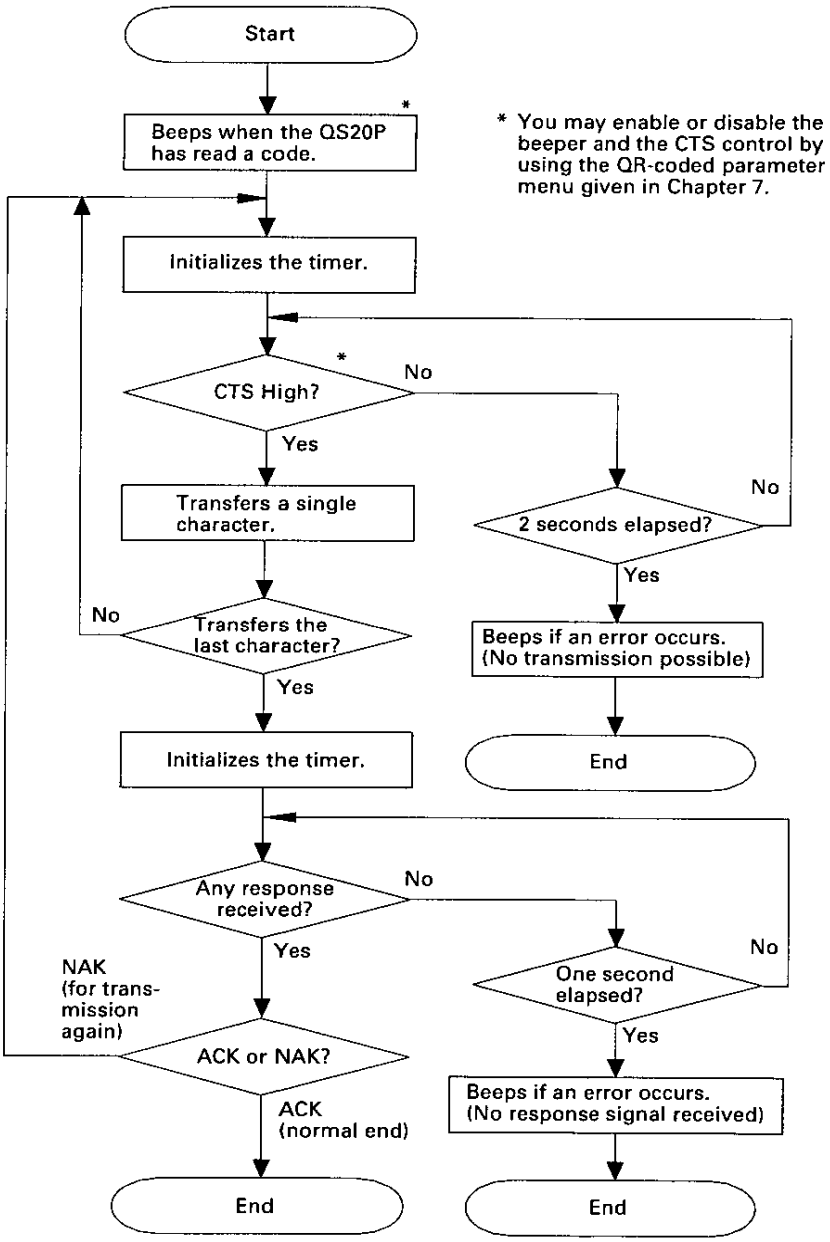
Start
Beeps when the QS20P has read a code.
*
* You may enable or disable the beeper and the CTS control by using the QR-coded parameter menu given in Chapter 7.
Initializes the timer.
CTS High?
*
No
Yes
Transfers a single character.
2 seconds elapsed?
No
Yes
Beeps if an error occurs. (No transmission possible)
End
No
Transfers the last character?
Yes
Initializes the timer.
Any response received?
No
Yes
One second elapsed?
No
Yes
NAK (for trans-mission again)
ACK or NAK?
ACK (normal end)
Beeps if an error occurs. (No response signal received)
End
End

■ Transmission rate

4800, 9600, 19200, 38400, 57600, or 115200 bps

■ Transferable characters and port settings

If not specified as binary codes, all data will be treated as ASCII codes. Listed below are port settings you can select. If data contains double-byte Japanese Kanji or binary data when the character length is set to 7 bits, the QS20P will ignore the MSB.

Start bit	1 bit (fixed)
Character length	7 or 8 bits
Parity check	Even, Odd, or None
Stop bit	1 or 2 bits

■ Transmission format

Header	Code ID mark	No. of digits				Data read	Terminator	BCC
		n1	n2	n3	n4			

(1) Header

You may select either "No header" or STX.

(2) Terminator

You may select ETX, CR, LF, or CR LF.

(3) BCC

Every parity bit of BCC (block check character) is set so that all set bits at the same bit level (including a parity bit) in the characters contained in the transmission block have an even number by exclusing-ORing. Those characters do not contain a header but include a terminator.

You may select whether BCC will be transferred. Note that BCC cannot be transferred if the transmission block contains no header.

(4) Code ID marks

Code ID marks are characters that identify the types of QR codes. You may select whether those ID marks will be transferred, by using the QR-coded parameter menu.

Code type		Code ID mark
QR code		Q
Split QR code ("Structured Append")	In edit mode	Q
	In non-edit mode	S

(5) No. of digits

The number of digits in code data is expressed in 4 bytes. You may select whether it will be transferred, by using the QR-coded parameter menu.

n1: 4th digit (0 to 9)
n2: 3rd digit (0 to 9)
n3: 2nd digit (0 to 9)
n4: 1st digit (0 to 9)

(6) Data read

The QS20P will transfer read data whose contents will differ depending upon the code type as described below.

- QR Code

  All data read

  NOTE: If the QS20P reads split QR codes in Non-edit mode, it will transfer not only the read data but the ordinal ID number (a single byte in hex.) assigned to the split code, the number of splits (a single byte in hex.), and parity (double bytes in hex.).

Appendix. Specifications

A1. QS20P

Power source		Lithium-ion battery cartridge (secondary batteries), 3.6 VDC
External dimensions (W x D x H)	(Bore: 8 mm)	20 x 162 x 43 mm (0.79 x 6.38 x 1.69 inches)
	(Bore: 11 mm)	20 x 169 x 43 mm (0.79 x 6.65 x 1.69 inches)
Weight		Approx. 70 g (excl. scanner cable) Approx. 105 g (incl. 0.8-m scanner cable)
Environmental requirements	Operating temperature range	0°C to 40°C
	Operating humidity range	10 to 85% RH (without dew condensation)
	Ambience	Without dust, dirt, or corrosive gases
	Ambient illuminance	3000 lux. or less
Scanning performance	Resolution	0.1 mm
	Readable codes	QR code Model 1, Model 2, and MicroQR
	Reflection intensity	45% min. for white cells 25% max. for black cells PCS value: 0.45 min.
Interface	Synchronous system	Start-stop
	Max. transmission speed	115200 bps
	Signal level	RS-232C compliant

A2. Power Supply Box

External dimensions (W x D x H)		54 x 90 x 31 mm (2.13 x 3.54 x 1.22 inches)
Weight		Approx. 50 g
Environmental requirements	Operating temperature range	0°C to 40°C
	Operating humidity range	10 to 85% RH (without dew condensation)
	Ambience	Without dust, dirt, or corrosive gases

A3. Interface Requirements

■ RS-232C interface

Dsub, 9-pin (female)

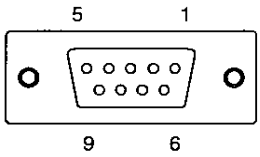

Pin No.	Signal	Functions	Signal IN/OUT
2	SD ($\overline{TXD}$)	Send data	Output
3	RD ($\overline{RXD}$)	Receive data	Input
5	SG	Signal ground	—
7	CS (CTS)	Ready to send	Input

■ Wiring example

Shown below is an example of wiring the QS20P up to the PC.

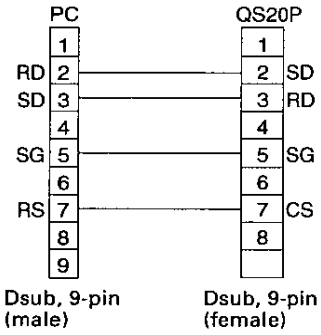

■ Interface circuits

Output circuit	Input circuit
$\overline{TXD}$ 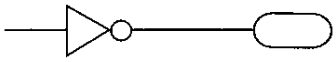 RS-232C LEVEL	$\overline{RXD}$, CTS 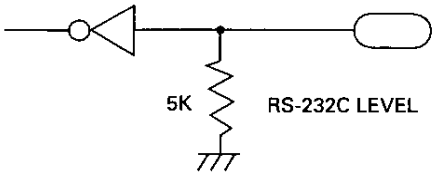 RS-232C LEVEL

Voltage polarity	Logical value	Control level
+	0 (space)	ON
-	1 (mark)	OFF

QR Code Scanner
QS20P

User's Manual

First Edition, January 2000

DENSO CORPORATION
Industrial Systems Product Division

The purpose of this manual is to provide accurate information in the handling and operating of the QS20P. Please feel free to send your comments regarding any errors or omissions you may have found, or any suggestions you may have for generally improving the manual.