Application Note

Interfacing a 2755-DS/DD Bar Code Decoder to PLC-5 using DH485 Protocol with the 2760-RB Module and the 2760-SFC2 Protocol Cartridge

Overview

The purpose of this application note is to explain how to interface the 2755-DS/DD Bar Code Decoder to the 2760-RB Network Interface Module via Allen Bradley's proprietary DH485 communications protocol using the 2760-SFC2 protocol cartridge. Up to thirty one decoders can be interfaced to each of the three network interface ports for a total of up to ninety three decoders per 2760-RB module.

This document includes cable diagrams and configuration information for the 2760-RB and the 2755-DS/DD decoder. Also included is an introductory PLC program necessary to establish communication from the PLC to the 2760-RB interface module.

Hardware Requirements

Implementation of the procedure described in this application note requires the following Allen-Bradley hardware:

- Allen Bradley 2755 family of unattended bar code decoders.
- Bulletin 2760-RB in a Bulletin 1771 rack with a PLC-5 processor
- 2760-SFC2 protocol cartridge.
- Personal computer (PC) with terminal emulator software or VT-100 type terminal to configure the 2755-DS/DD bar code decoder and the 2760-RB network interface module
- Appropriate cables to program the PLC-5 and configure the Bulletin 2755 bar code decoder. Refer to hardware manuals for cable requirements.
- Catalog Number 1784-KT or equivalent card installed in your personal computer to enable you to program the PLC-5.
- DH485 network cables.

Software Requirements

Implementation of the procedure described in this application note requires the following Allen-Bradley software:

- Bulletin 6200 development software for the PLC-5
- Terminal Emulation Package (such as Procomm® or Windows™ Terminal) if a personal computer is used to configure the 2755 DS/DD.

Related Publications

This document refers to the following publications, which should be available for reference while working through this application note:

Publication Number	Title
1785-XXX	User Manual for your PLC-5
6200-XXX	Programming Manual for your PLC-5
2755-833	Bulletin 2755-DS/DD Enhanced Decoder User Manual
2760-ND001	Bulletin 2760 Flexible Interface Module User Manual
2755-822	Bulletin 2760 RS485 LAN Master/Slave Protocol Cartridge User Manual

Configuration

Mount the Catalog Number 2760-RB interface module in Slot 0 of the 1771 chassis (next to the PLC). The Bulletin 2755-DS/DD bar code decoder communicates through Port 1 of the 2760-RB module. A Catalog Number 1771-ASB interface module can also be used to communicate with the 2760-RB module over the chassis backplane via Remote I/O.

The 2760-RB configuration example in this document includes configuration screens and DIP switch settings necessary to establish communications with the 2755-DS/DD decoder via DH485. The 2760-RB and the 1771 chassis are set up for two slot addressing. There are other 2760-RB configuration features available and not used. See Publication 2760-ND001 for additional information.

The 2755-DS/DD decoder configuration shows only the screens necessary to establish communications to the 2760-RB module. Other decoder configuration parameters such as selecting bar code symbology or a decoder trigger method are beyond the scope of this document. See the Decoder User Manual Publication 2755-833 for additional information.

The PLC program is a minimum mode example showing that data can be moved into the PLC.

Use the following table as a configuration guideline when using the examples shown in this document.

PLC 5 COMPATABILITY

2760-RB In Use	PLC-5, -15, -25, etc.	New Generation PLC-5 (Series A, Rev. C or above only)
Series A, Rev. G or below	Follow example PLC program as shown in Figure No. 4.	Set BT Compatibility Bit S26/4 while in program mode. Use example PLC program shown Figure No. 4.
Series A, Rev H or Above		Add ladder logic using IIN update of RB. BTR must be before 'BTW. Refer to Figure No. 5

Figure 1
Configuration

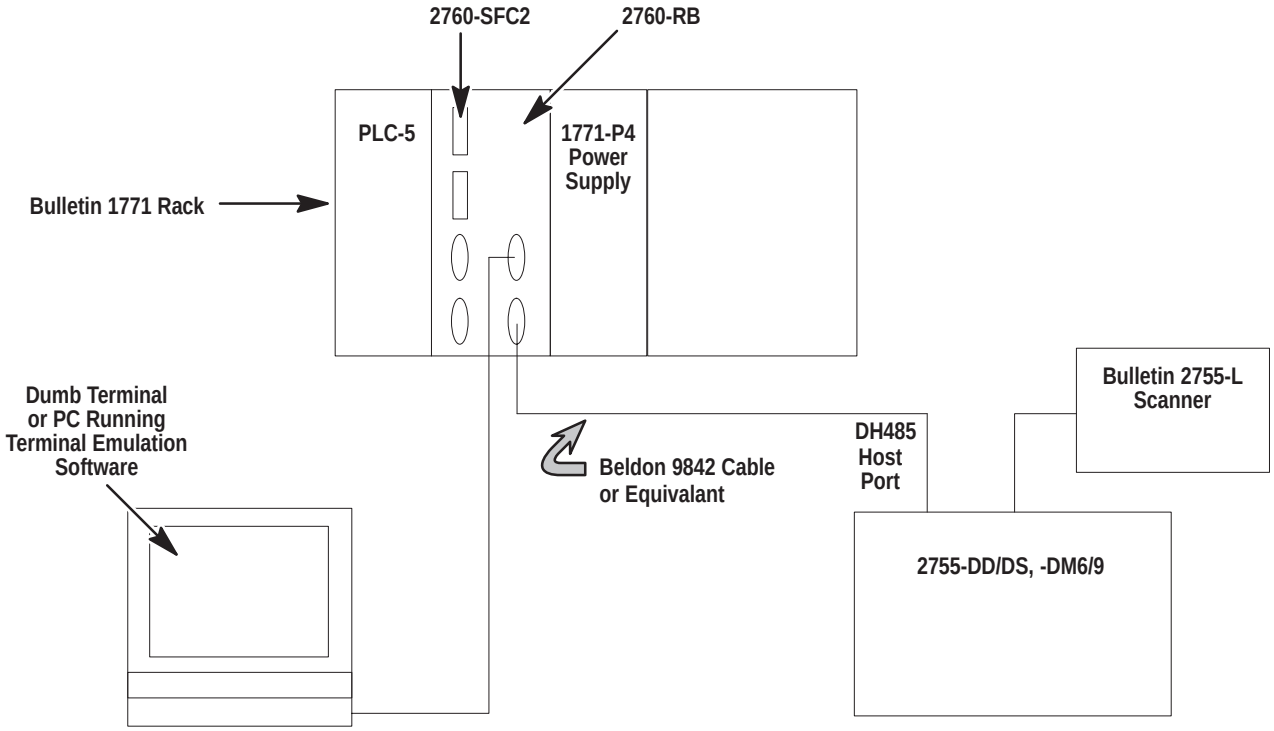

Table A
(Example) PLC-5 Processor Dip Switch Settings

Switch No.	1	2	3	4	5	6	7	8
SWI-1	on	on	on	on	on	on	on	off
SWI-2	off	on	on	on	on	on	on	off
SW-3	on	on	off	off				

Table B
(Example) I/O Chassis Backplane Dip Switch Settings

	1	2	3	4	5	6	7	8
	off	off	off	off	off	on	off	off

Table C
(Example) 2760-RB Module Dip Switch Settings

Switch No.	1	2	3	4	5	6	7	8
SWI-1	off	off	off	off	off	off	off	off
SWI-2	off	off	off	off	off	off	off	off
SW-3	off	off	off	off				
SW-4	off	off	on	off				

Running the Application

The configuration screens for the 2760-RB and the 2755-DS/DD decoder should be entered exactly as shown in the following pages. Save them, and then restart the decoder. Connect a network cable from the host port of the 2755-DD/DS decoder to port #1 of the 2760-RB. See Figure 6 for cable construction information.

When the 2755-DS/DD is in the network mode (RS485 ASCII Mode 1 or RS485 ASCII Mode 2) it will be waiting for a poll from the 2760-RB module. If the 2760-RB is not configured to poll a node that is physically installed on the network, the decoder will refuse to read any bar codes. When the decoder has valid bar code data or a ”no read message” it will transmit the data to the 2760-RB on receipt of a poll.

You can recognize “Normal operation ” by green LED’s on the 2760-RB module

- The Active/Fault LED will flash green.
- The Port 1 LED will be dim green.

In addition, the yellow Communication LED on the 2755-DS/DD Decoder will be “Solid ON”.

The bar code data will appear in the PLC data table in the following format:

0	BYTE COUNT IN BCD	BYTE COUNT IN BCD
1	DATA SOURCE	DATA DESTINATION
2	LSAP NUMBER (ALWAYS 80H)	NODE NUMBER
3	DATA	DATA
4	DATA	DATA
5	DATA	DATA

See the 2760-RB and the 2760-SFC2 User Manuals for further information.

Figure 2
2755-DS/DD Host Communications Configuration Screens

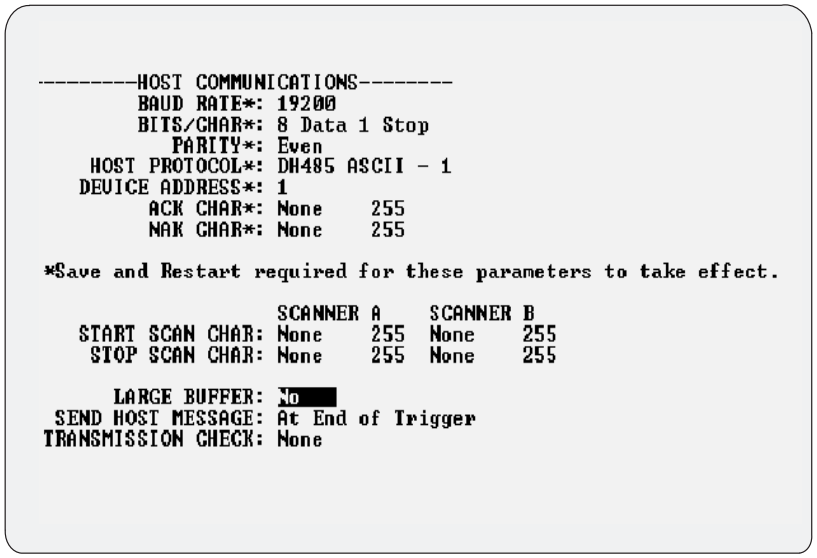

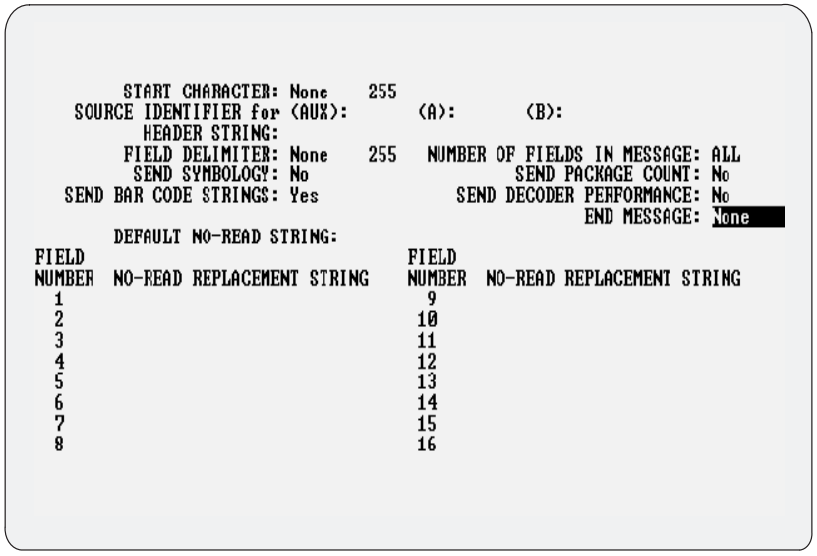

Important: When configuring the 2760-RB module, first select “Main Menu Selection 90B” to reset the unit to factory defaults. Then configure screens 3, 21, and 11 in that order exactly as shown below.

Figure 3a
2760-RB Module Configuration Screens

```
        2760–RB        SERIES A  REVISION J
    COPYRIGHT 1989                ALLEN–BRADLEY COMPANY, INC.
    ____________________________________________________

1X  – CONFIGURATION PARAMETERS        2X  – IDENTIFICATION NUMBERS
3   – DEVICE PORT PROTOCOL NAMES      4DM – MATCH CODE ENTRIES
5I  – DISCRETE BYTE INPUT ENTRIES     6   – THE DATA MATRIX ENTRIES
7   – THE PASS THROUGH ENTRIES        8   – NON–VOLATILE SCRATCH PAD AREA
9XF – RB MODULE FUNCTIONS            AX  – HARDWARE DIAGNOSTICS
BX  – SOFTWARE DIAGNOSTICS            C   – EXIT CONFIGURATION MODE

WHERE X (0 TO 7) AND D (1 TO 3) ARE PORT NUMBERS WHICH ARE DEFINED BELOW :

0 – RB CMMND PRCSS   2 – SERIAL PORT 2   4 – CONFIG PORT     6 – I/O RACK SLT 1
1 – SERIAL PORT 1    3 – SERIAL PORT 3   5 – I/O RACK SLT 0   7 – RESERVED

WHERE F (A TO E) ARE FUNCTIONS THAT RB CAN PERFORM WHICH ARE DEFINED BELOW :

A – RESET   B – SET DEFAULTS   C – FLUSH   D – INITIALIZE   E – CLEAR DIAGS

WHERE M (A TO T) AND I (A TO H) ARE ENTRY NUMBERS FOR THE SELECTION MADE ABOVE.

        ENTER A MAIN MENU SELECTION:
```

```
            ENTER A MAIN MENU SELECTION: 3

PORT 1 = COPYRIGHT 1989          ALLEN–BRADLEY COMPANY, INC.
2760–SFC2  LAN    , SERIES A , REVISION A    (YES/NO) = YES.

PORT 2 = COPYRIGHT 1989          ALLEN–BRADLEY COMPANY, INC.
2760–SFC2  DT     , SERIES A , REVISION A    (YES/NO) = YES.

PORT 3 = COPYRIGHT 1989          ALLEN–BRADLEY COMPANY, INC.
2760–SFC2  LAN    , SERIES A , REVISION A    (YES/NO) = YES.

EDIT THIS SELECTION (YES/NO) ?
```

Figure 3b
2760-RB Module Configuration Screens

```
                    ENTER A MAIN MENU SELECTION: 21

RS485  LAN  2755-DM6  ASCII  MODE  3,  0h  (YES/NO) = YES

EDIT THIS SELECTION (YES/NO) ?
```

```
ENTER A MAIN MENU SELECTION: 11

SLOT TIME (NO. CHARS) (DEC 0...255) = 7.
INTER-CHAR TIME (NO. CHARS) (DEC 0...255) = 7.
IDLE TIME (NO. CHARS) (DEC 0...255) = 3.
RETRIES (DEC 0...255) = 3.
19200 BITS PER SECOND (YES/NO) = YES.
BCD NODE NUMBERS (ENABLE/DISABLE) = ENABLE.
BYTE SWAPPING (ENABLE/DISABLE) = ENABLE.
RECEIVE MATRIXING (ENABLE/DISABLE) = DISABLE.
MATRIX ADDRESS (HEX 0...ffff) = 0.
RE–ESTABLISH FREQUENCY (DEC 0...255) = 5.
POLL FREQUENCY/DESTINATION[0] (HEX 0...ffff) = 5.
POLL FREQUENCY/DESTINATION[1] (HEX 0...ffff) = 105.
POLL FREQUENCY/DESTINATION[2] (HEX 0...ffff) = 5.
POLL FREQUENCY/DESTINATION[3] (HEX 0...ffff) = 5.
POLL FREQUENCY/DESTINATION[4] (HEX 0...ffff) = 5.
POLL FREQUENCY/DESTINATION[5] (HEX 0...ffff) = 5.
POLL FREQUENCY/DESTINATION[6] (HEX 0...ffff) = 5.
POLL FREQUENCY/DESTINATION[7] (HEX 0...ffff) = 5.
POLL FREQUENCY/DESTINATION[8] (HEX 0...ffff) = 5.
POLL FREQUENCY/DESTINATION[9] (HEX 0...ffff) = 5.
POLL FREQUENCY/DESTINATION[10] (HEX 0...ffff) = 5.

CONTINUE THIS SELECTION (YES/NO) ?
EDIT THIS SELECTION (YES/NO) ?
```

Figure 4
Sample PLC Program
PLC 5/15/25 Etc. to 2760-RB

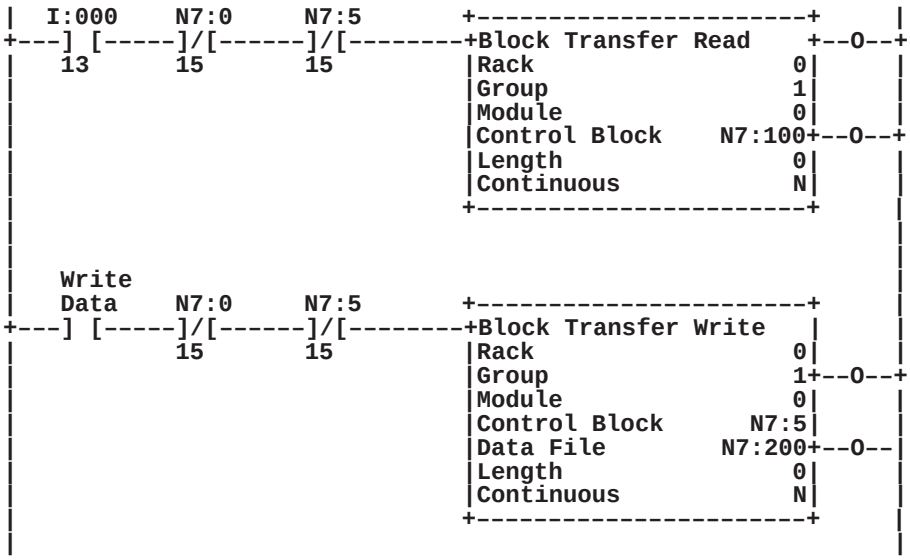

Refer to your PLC-5 Instruction Reference Manual for detailed information on using the PLC-5 programming software.

Using the 2760-RB, Revision H or Above, with the New Generation PLC5

When the 2760-RB, Revision H or above, is used with the New Generation PLC5 processors in a local rack, there is a possibility that the PLC will not see the BRR bit from the 2760-RB. For the PLC5 to see the BTR bit, an odd number of image scans must occur. To ensure that the BTR instruction sees the BRR bit (bit 13) you must place an Immediate Input Instruction addressed to the BRR bit in another rung just before the Block Transfer Read (BTR) rung. This ensures that the BRR bit is seen by the NP-5 processor. See Figure 5 below.

Figure 5
Sample PLC Program
2760-RB, Revision H or J to PLC 5/20/30/40/50

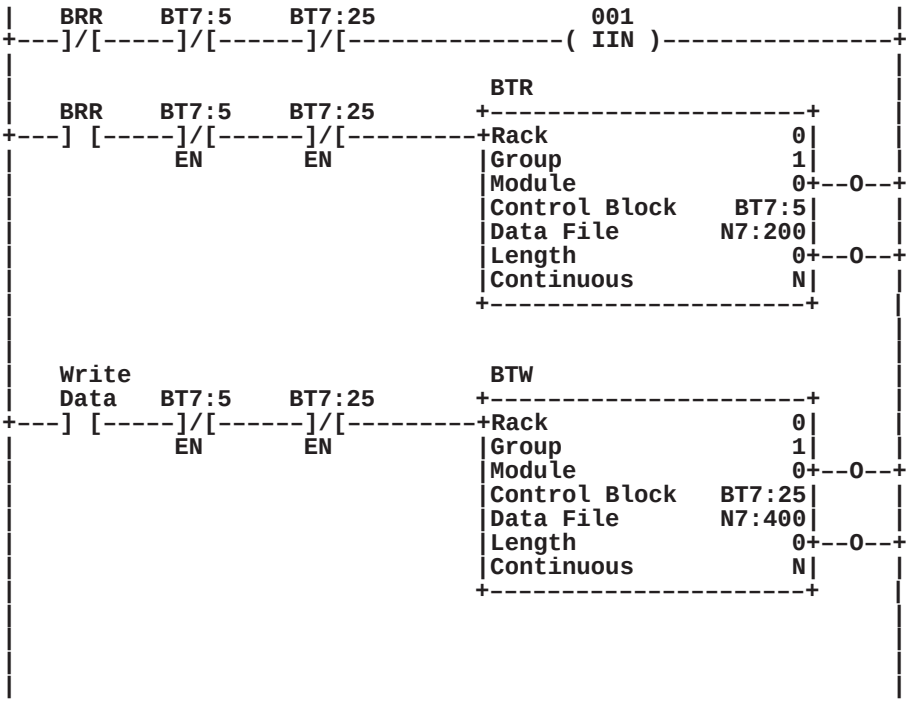

Note: BTR must come before BTW.

Figure 6
Cable diagrams

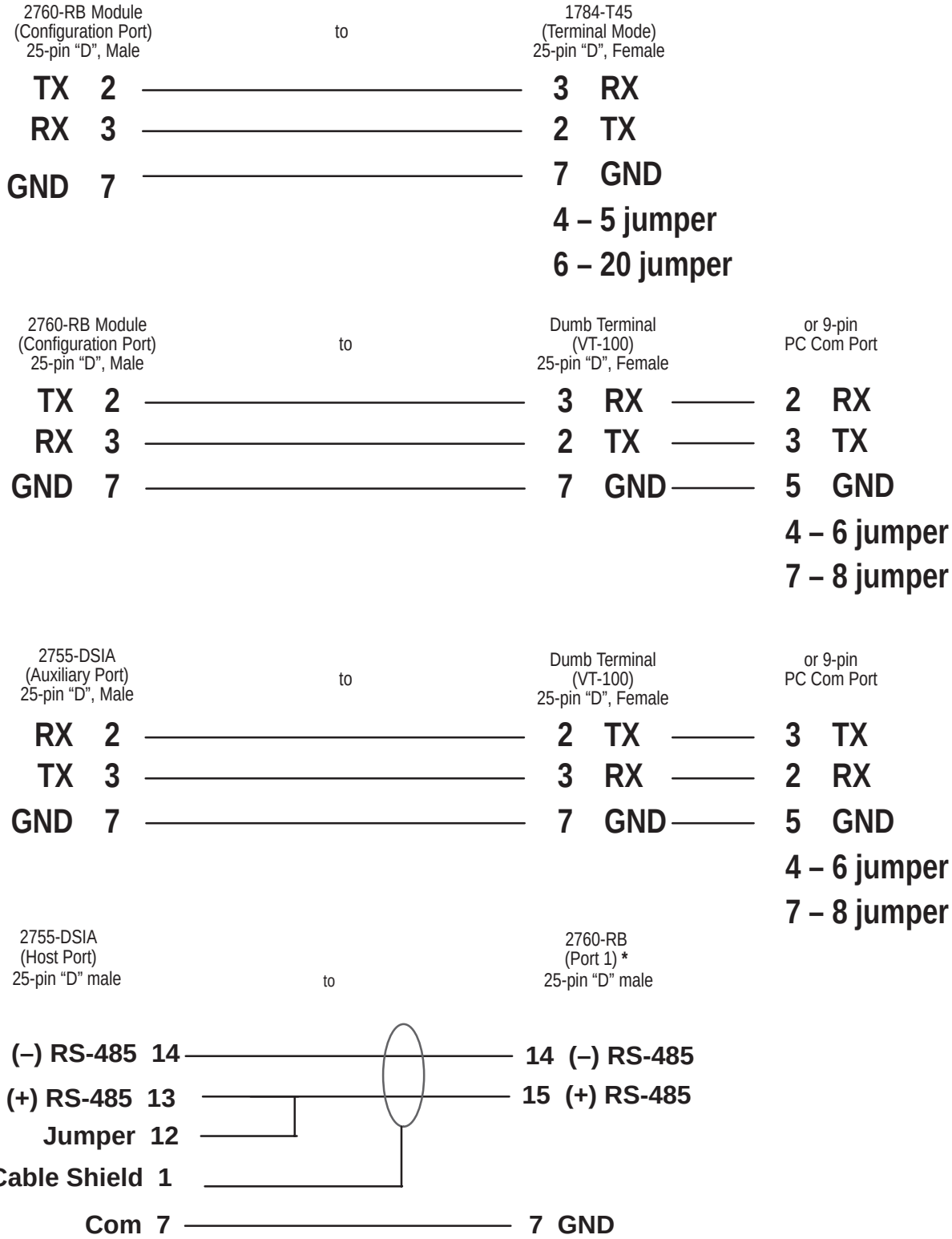

Note: Use Beldon 9842 Cable or Equivalant.

***Note:** Refer to Publication 2760-822 (Pages 4-11 and 5-5) for further RS-485 wiring details, especially if using the node connectors provided with the 2760-SFC2 Protocol Cartridges.

Notes:

SLC 5/03, SLC 5/04, DH+, and INTERCHANGE are trademarks of Allen-Bradley Company, Inc.
OS/2 is a registered trademark of International Business Machines, Incorporated.
Gateway 2000 and COLORBOOK are trademarks of Gateway 2000, Inc.
Microsoft and MS are registered trademarks, and Windows is a trademark of Microsoft Corp.
VERSA is a trademark of Nippon Electric Information Systems Inc.

Rockwell *Automation*

Allen-Bradley

Allen-Bradley, a Rockwell Automation Business, has been helping its customers improve productivity and quality for more than 90 years. We design, manufacture and support a broad range of automation products worldwide. They include logic processors, power and motion control devices, operator interfaces, sensors and a variety of software. Rockwell is one of the worlds leading technology companies.

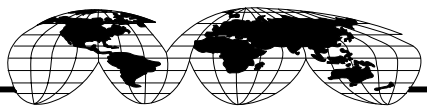

Worldwide representation.

Argentina • Australia • Austria • Bahrain • Belgium • Brazil • Bulgaria • Canada • Chile • China, PRC • Colombia • Costa Rica • Croatia • Cyprus • Czech Republic • Denmark • Ecuador • Egypt • El Salvador • Finland • France • Germany • Greece • Guatemala • Honduras • Hong Kong • Hungary • Iceland • India • Indonesia • Ireland • Israel • Italy • Jamaica • Japan • Jordan • Korea • Kuwait • Lebanon • Malaysia • Mexico • Netherlands • New Zealand • Norway • Pakistan • Peru • Philippines • Poland • Portugal • Puerto Rico • Qatar • Romania • Russia–CIS • Saudi Arabia • Singapore • Slovakia • Slovenia • South Africa, Republic • Spain • Sweden • Switzerland • Taiwan • Thailand • Turkey • United Arab Emirates • United Kingdom • United States • Uruguay • Venezuela • Yugoslavia

Allen-Bradley Headquarters, 1201 South Second Street, Milwaukee, WI 53204 USA, Tel: (1) 414 382-2000 Fax: (1) 414 382-4444

Publication 2755-2.55 – September 1995

40062-320-01(A)

Copyright 1995 Allen-Bradley Company, Inc. Printed in USA